PRODUCT OVERVIEW

SGM®

PRODUCT OVERVIEW

Table
of contents

ABOUT SGM 5
MOVING HEADS
G•Spot 8
G•Profile 16
G•Wash 22
G•1 Beam 26
G•1 Wash 32
G•4 Wash 36
STROBE LIGHTS
X•5 42
XC•5 46
WASH LIGHTS
i•2 Series 52
i•5 Series 56
P•1 60
P•2 64
P•5 70
P•5 W & P•5 TW 76
Q•2 & Q•2 W 84
Q•7 & Q•7 W 90
SixPack 98
EFFECT LIGHTING
LT•100 & LT•200 106
LB•100 110
LP•700 114
LD•5 118
RAIL LIGHTS
R•2 124
The POIs - Permanent Outdoor Installation 130
DMX & ART-NET 150

SGM

About SGM

Originally founded in 1975, SGM has over 40 years of experience in designing and producing lighting technology. Highly specialized in LED and IP65-rated lighting solutions, SGM has embarked on a journey to become the world's leading manufacturer of LED lighting.

With a constantly growing, highly qualified distributor network and branded subsidiaries around the world, SGM has established a strong global presence, while its product innovations, such as the iconic P-5 wash light, the IP65-rated G-Spot and the G-1 Beam LED moving heads, have truly revolutionized the lighting industry.

SGM stands for innovation and experimentation with emerging technologies, and has one of the most experienced R&D teams in the lighting business. Since 2012, SGM has been headquartered in Denmark under the management of Peter Johansen. And with modern production facilities at HQ, quality in every aspect is assured.

While consolidating its position as an established player in entertainment lighting, SGM is intensifying its focus on architectural lighting solutions with heavy investments in R&D. As a result, the spring of 2016 marked the birth of a whole new range of IP66-rated lighting fixtures for permanent outdoor installation (POI).

MOVI
HEAD

NG
DS

G·Spot
G·Profile
G·Wash
G·1 Beam
G·1 Wash
G·4 Wash

MOVING
HEADS

The G-Spot

Award-winning, IP65-rated LED moving head

Today more and more moving heads are being exposed to wet and humid conditions. The consequences of such conditions are high and may compromise the fixtures' cooling effect, luminous intensity and projection quality, while dirt accumulates inside.

Based on the revolutionary P-5 technology which includes the highest luminous output and an IP65-rating, we have overcome these challenges. The G-Spot is a maintenance-free product with an IP65-rating. Being water, dirt and sand proof, the G-Spot is spared from internal accumulation of dirt and humidity.

Worst case scenario in a turbulent environment, is that only the front lens needs to be wiped off, virtually eliminating the need for cleaning and maintenance – which is a huge time and cost saver.

The G-Series moving heads are proven to have the brightest colors for fixtures in their category. Due to its revolutionary product features, the G-Spot won the prestigious industry PLASA Award for Innovation in 2013.

Features

- Powerful LED light source
- The brightest colors
- Low power consumption (proportional to supply)
- Aesthetic Danish design
- No noise, no stray light
- Humidity elimination
- Long lifetime
- 2 independent rotating gobo wheels
- Configuration via RFID from smartphone
- Excellent optical features
- Ultra high-speed strobe effect
- Easy linking with wireless DMX
- Universal connection possibilities
- Effect wheels
- High-precision pan and tilt
- Dynamic color temperature correction
- Electronic dimming
- Iris
- 4-facet prism
- Variable frost
- Practically maintenance-free

High applicability

- Television
- Theatre
- Opera
- Touring
- Architectural installations
- Circus arts
- Stadiums
- Theme parks
- Outdoor events

The G-Spot patents

The G-spot is covered by several patents safeguarding the uniqueness of the product.

The G-Spot is protected under the following patent: **PCT/IB2014/062475** (Method of de-humidifying a water-proof LED lighting fixture). Another PCT patent for the G-spot (Stage Equipment System) is published under **no. WO 2013/034968**. The product also has a published European Patent named Lighting Device with a Gyroscope under no. **2690357**.

Furthermore, the G-Spot has Community Trade Mark **no. 011046241.**

	G-Spot	Conventional*
Noiseless	YES	NO
Stray light	NO	YES
Maintenance-free	YES	NO
Low power consumption	YES	NO
Power consumption during breaks	NO	YES
Heat radiation during breaks	NO	YES
Lifetime of 50,000 hrs	YES	NO
Constant CRI	YES	NO
Color calibration	YES	NO
Strike time	NO	YES
Cool down time	NO	YES
Lamp replacement	NO	YES
Risk of lamp explosions	NO	YES
Operation in wet environments	YES	NO
RFDI interface	YES	NO
Need for a dome	NO	YES

** G-Spot compared to a market conventional discharge moving head utilizing an Osram HTI 1000/PS Lok-it at 240v*

Beam angle

Adjustable beam angle: 8°-43°.

Pseudo zoom (by adjusting the iris): 1°-43°.

Gobos

Gobo wheel 1

1 2 3 4 5

Gobo wheel 2

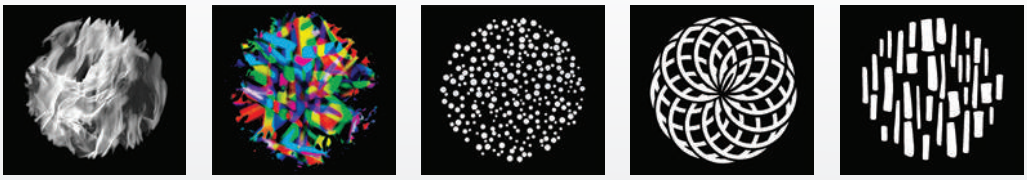

1 2 3 4 5

No noise, no stray light

With the G-Spot comes the benefit of a silent unit valuable for any installation. The integrated fan provides variable fan control through four fan settings for quiet operation: **Silent, Standard, Max and Full Fan Speed.**

Meanwhile, the exterior design of the moving head has been constructed to prevent stray light scatter, causing the fixture to illuminate itself.

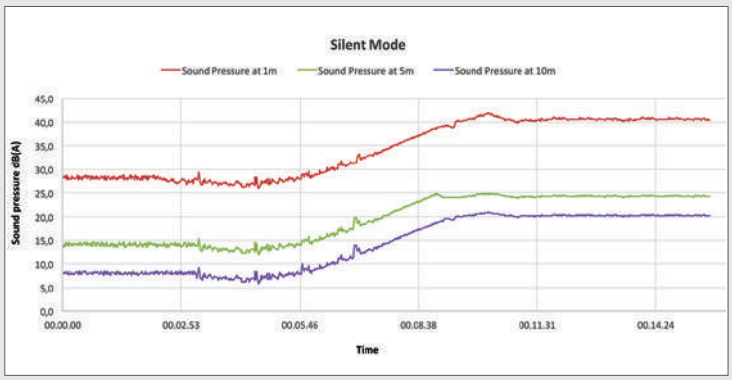

Humidity elimination

SGM has introduced a patented solution to ensure the complete IP65-rating of the G-Spot; a pressure relief valve equalization membrane fitted to equalize the air pressure. Through this valve, air is allowed to pass through the membrane, while humidity cannot.

The humidity will be maintained at a constant low level by the electrolysis process of hydrogen extraction which eliminates humidity – thereby creating the ideal environment for electronic circuits.

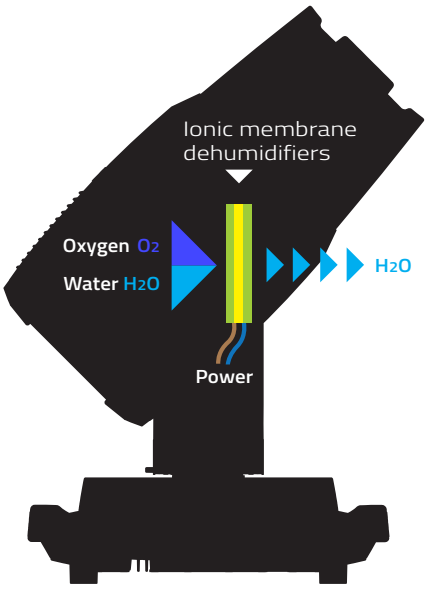

LUX diagram All on Narrow and Wide

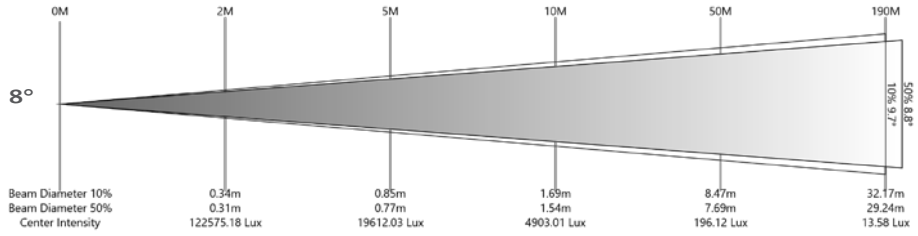

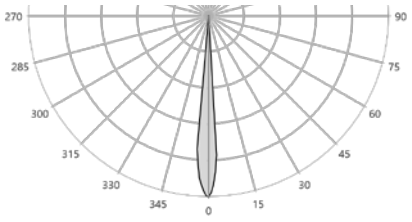

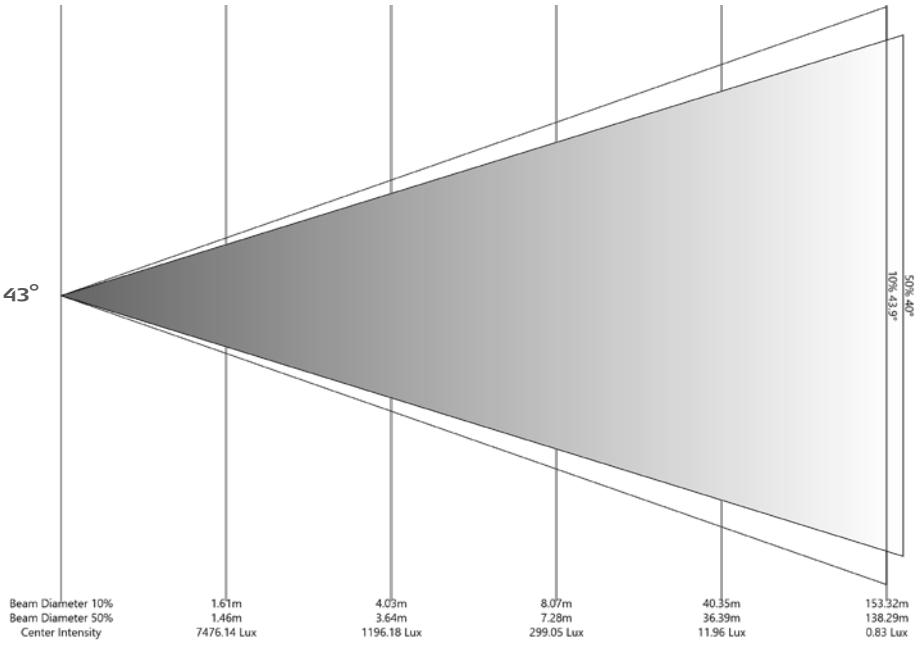

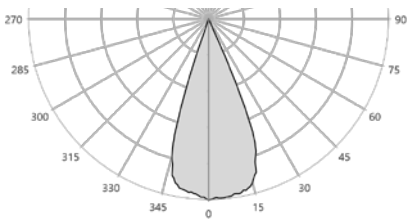

Dimensions

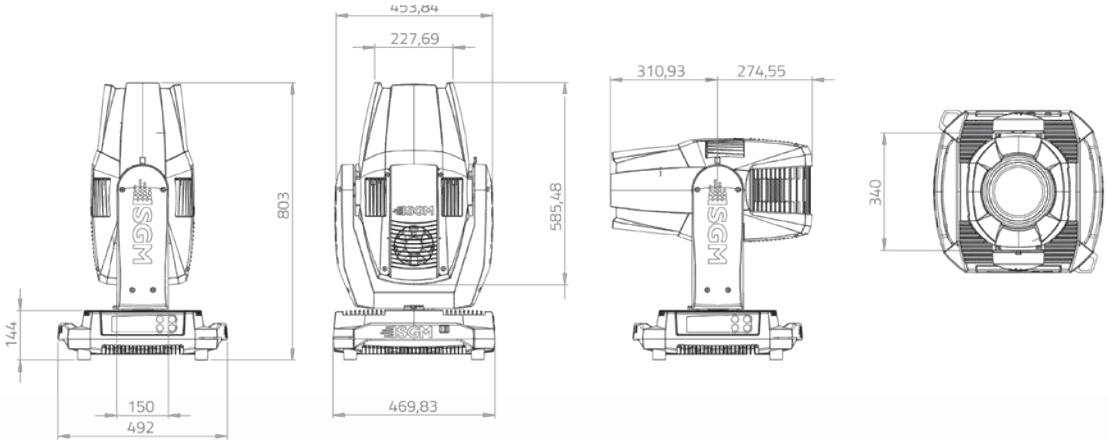

Connection diagram

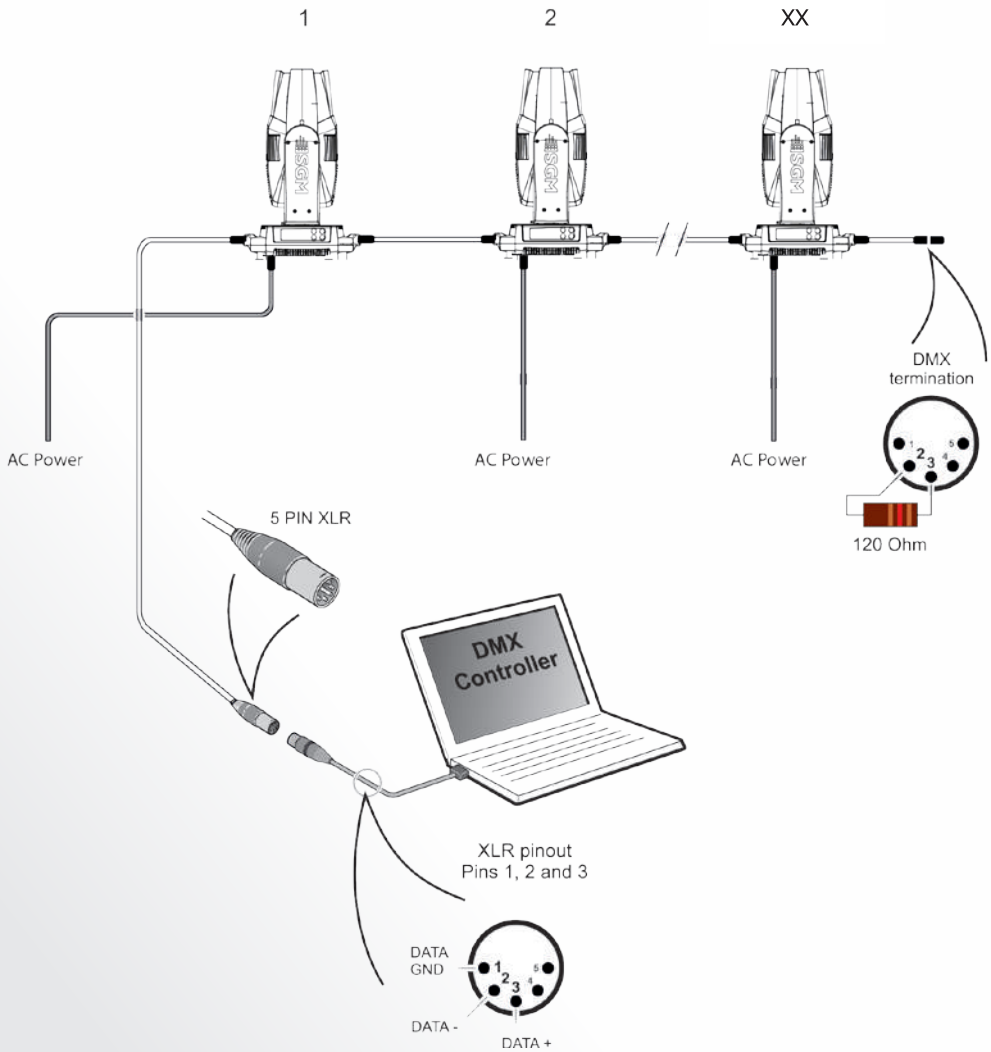

G•Spot
Specifications

Optics	Light source	High-power RGBY LED
	LEDs expected lifetime	50,000 hours*
	Zoom range, 16 bit	8° to 43° + pseudo zoom 1° to 43°
	Prism	4-facet rotating prism
	Frost	Variable 0% - 100%
Photometric	Light output	12,000 lm (all LEDs on)**
		3,000 lm (red)**
		3,100 lm (green)**
		1,400 lm (blue)**
	Color temperature range	2,000K - 10,000K
	Efficacy	12 lm/W
Gobos	Outside diameter	37.5 mm (Standard E size gobo)
	Maximum image diameter	30 mm
	Maximum thickness	1.1 mm black & white or 3.5 mm colored glass or textured gobos
	Glass gobo	Borosilicate high-temperature glass
	Metal gobo	Not recommended
Features	Iris	1-100%, Pulse effects
	Dimming	Electronic
	Strobe	Ultra-high-speed strobe effect (1-50Hz)
	Pan/Tilt	540° / 270°
	Gobo wheels	2 independent rotatable gobo wheels:
		Gobo wheel 1: 5 indexable gobos + open
		Gobo wheel 2: 5 indexable gobos + open
	Effect wheels	2 independent effect wheels with semi-continuous effect
Electrical	AC power, nominal	100 - 240V 50/60 Hz
	AC power, max. rating	100 - 264V 50/60 Hz
	Power supply unit	Auto-ranging electronic switch-mode
	Main fuse	T12A-250V
	Max. power consumption	1100 W
	Standby power	75 W
Programming and control	Protocol	USITT DMX512A
	Setting and addressing	Control panel, RDM or RFID
	Wireless DMX	LumenRadio with RDM
	Standalone mode	Up to 24 programmable scenes
	16-bit control	Dimmer, colors, pan/tilt, gobo index/rotation, zoom, focus
	Color temperature control	2,000K - 10,000K
	DMX channels	24/30
Physical	Dimensions	Length (base): 470 mm (18.5 in.)
		Length (head): 585 mm (23 in.)
		Width (base): 492 mm (19.4 in.)
		Width (head): 458 mm (18 in.)
		Height (head straight up): 805 mm (31.6 in.)
		Height (maximum): 821 mm (32.3 in.)
	Weight	52 kg (114 lbs.)
	Material	Aluminium, Steel, Plastic PA6.6
	IP class	IP65
Installation	Mounting points	Four times two quarter-turn locking points
	Orientation	Any
	Safety features	2 x attachment points for safety wire
		Minimum distance to combutible materials: 0.3mtr (11 In.)
		Minimum distance to illuminated surfaces: 0.3mtr (11 In.)
Thermal	Temperature range, Operating	–40° to +50°C (-40° to +122°F)
	Temperature range, Start-up	–20° to +50°C (-4° to +122°F)
	Temperature range, Storage	–40° to +80°C (-40° to +176°F)
	Humidity	98%
	Cooling	Active
Connections	AC power input	Neutrik true1 power input connector
	DMX data in/out	IP65 Neutrik HD locking XLR 5-pin cable, 0.2m (7.8 in)
Certified to	CSA E60598-1, Ed:2	
	CSA-E598-2-17-98, Ed: 1	
Conforms to	UL Std. 1573	
	2014/35/EU: Low Voltage Directive	EN 60598-1, EN 60598-2-17, EN 62471, EN 60529
	2014/30/EU: EMC Directive	EN 55103-1, EN 55103-2, EN 61000-3-2, EN 61000-3-3
	RoHS2 Directive	2011/65/EU
Included items	Included items	Two Omega brackets with 1/4-turn fasteners
		2 mtrs. Power Cable with Neutrik true1 power connector
		User manual
Fixtures and accessories	Fixtures	Order no: 80021002 - G-Spot Moving Head, Std, BL
		Order no: 80021005 - G-Spot Moving Head, Std, WH
		Order no: 80021009 - G-Spot Moving Head, Std, CU
	Wireless Transmitter	Order no: 80070229 - Lumen Radio CRMX transmitter (DMX only)
	Cables	Order no: 83062011 - SGM USB uploader cable
		Order no: 07860040 - 2m power cable with Neutrik TRUE1
	Bracket	Order no: 83060602 - Omega bracket
	Flightcase	Order no: 82051001 - Single flightcase G-Spot

**Figures provided by manufacturer and obtained under manufacturer's test conditions*

***Goniometer Scan / SGM Illumination Lab 1.6.0.0*

BL = Black (RAL 9004)

WH = White (RAL 9010)

CU = Custom Color (Any RAL color)

plasa
WINNER OF THE 2013
plasalondon
AWARDS FOR INNOVATION

The G·Spot:

Innovation award winner at PLASA 2013

"It's the first fully weatherised automated profile spot. It's an elegant and aesthetically pleasing fixture that will be able to withstand any show in any environment, and be able to withstand even the British festival season."

The judging panel

FRAME YOUR
SCENERY

IP65 RoHS

The G·Profile

LED moving head with exclusive framing options

As part of the moving head product range, the G-Profile offers exclusive framing options. Alternatively, an add-on framing module is interchangeable with the gobo module of the G-Spot.

The framing allows the G-Profile to perform beam-shaping images and projections via four individually controllable blades, each adjustable up to 25 % over the center of aperture and anglable ±30 degrees, while the module is rotatable through ±45 degrees.

The G-Profile still provides the option of combining framing techniques with five rotating gobos and opens for gobo patterns and animation effects when framing is used. This is a perfect appliance for enhanching performance for television productions, theatres and architectural installations.

The set of gobos allows for the creation of user-controllable soft framing, and the effect wheel makes it possible to achieve dynamic and continuous animation effects.

The G-Profile is a maintenance-free product with an IP65-rating and is water, dirt and sandproof. The G-Series moving heads are proven to have the brightest colors for a fixtures in their category.

Features

- Advanced and adjustable framing shutters
- The brightest colors
- Practically maintenance-free
- Powerful LED light source
- Low power consumption (proportional to supply)
- Aesthetic Danish design
- No noise, no stray light
- Humidity elimination
- Long lifetime
- Configuration via RFID from smartphone
- Excellent optical features
- Ultra high-speed strobe effect
- Easy linking with wireless DMX
- Universal connection possibilities
- Effect wheel
- High-precision pan and tilt
- Dynamic color temperature correction
- Electronic dimming
- Iris
- 4-facet prism
- Variable frost

High applicability

- Television
- Theatre
- Opera
- Touring
- Architectural installations
- Circus arts
- Stadiums
- Theme parks
- Outdoor events
- Etc.

The G-Profile patents

The G-Profile is covered by several patents safeguarding the uniqueness of the product.

The G-Profile is protected under the following patent: **PCT/IB2014/062475** (Method of de-humidifying a water-proof LED lighting fixture). Another PCT patent for the G-Profile (Stage Equipment System) is published under **no. WO 2013/034968**. The product also has a published European Patent named Lighting Device with a Gyroscope under **no. 2690357**.

The G-Profile has Community Trade Mark **no. 011046241**.

	G-Profile	Conventional*
Noiseless	YES	NO
Stray light	NO	YES
Maintenance-free	YES	NO
Low power consumption	YES	NO
Power consumption during breaks	NO	YES
Heat radiation during breaks	NO	YES
Lifetime of 50,000 hrs	YES	NO
Constant CRI	YES	NO
Color calibration	YES	NO
Strike time	NO	YES
Cool down time	NO	YES
Lamp replacement	NO	YES
Risk of lamp explosions	NO	YES
Operation in wet environments	YES	NO
RFDI interface	YES	NO
Need for a dome	NO	YES

** G-Profile compared to a market conventional discharge moving head utilizing an Osram HTI 1000/PS Lok-it at 240v*

Beam angles

Adjustable beam angle: 8°-43°.

Pseudo zoom (by adjusting the iris): 1°-43°.

Framing gobos

Framing

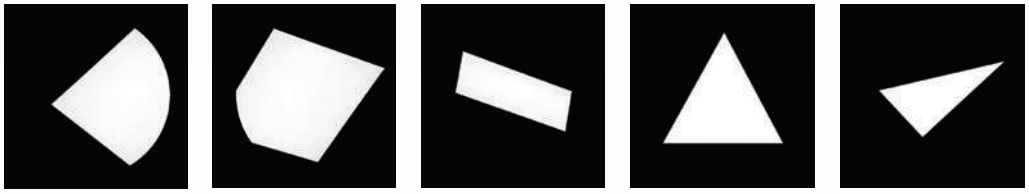

Gobo wheel

1 2 3 4 5

No noise, no stray light

With the G-Profile comes the benefit of a silent unit valuable for any installation. The integrated fan provides variable fan control throughfour fan settings for quiet operation: **Silent, Standard, Max and Full Fan Speed.**

Meanwhile, the exterior design of the moving head has been constructed to prevent stray light scatter, causing the fixture to illuminate itself.

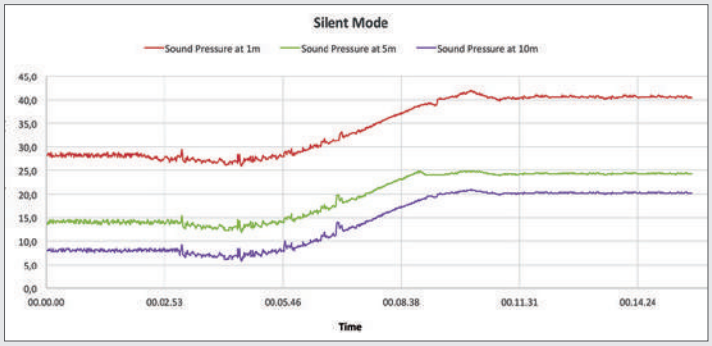

Humidity elimination

SGM has introduced a patented solution to ensure the complete IP65-rating of the G-Profile; a pressure relief valve equalization membrane fitted to equalize the air pressure. Through this valve, air is allowed to pass through the membrane, while humidity cannot.

The humidity will be maintained at a constant low level by the electrolysis process of hydrogen extraction which eliminates humidity – thereby creating the ideal environment for electronic circuits.

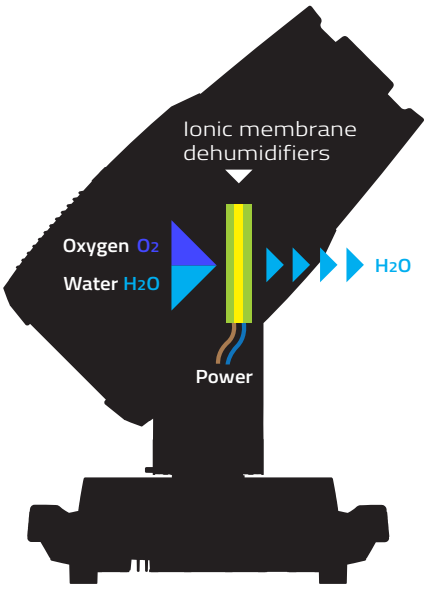

LUX diagram All on Narrow and Wide

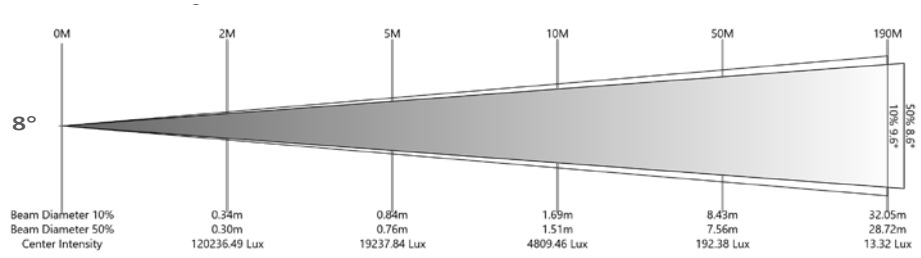

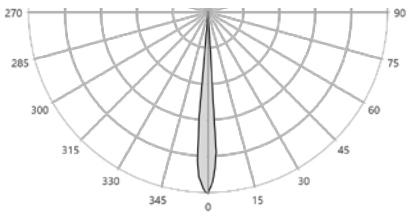

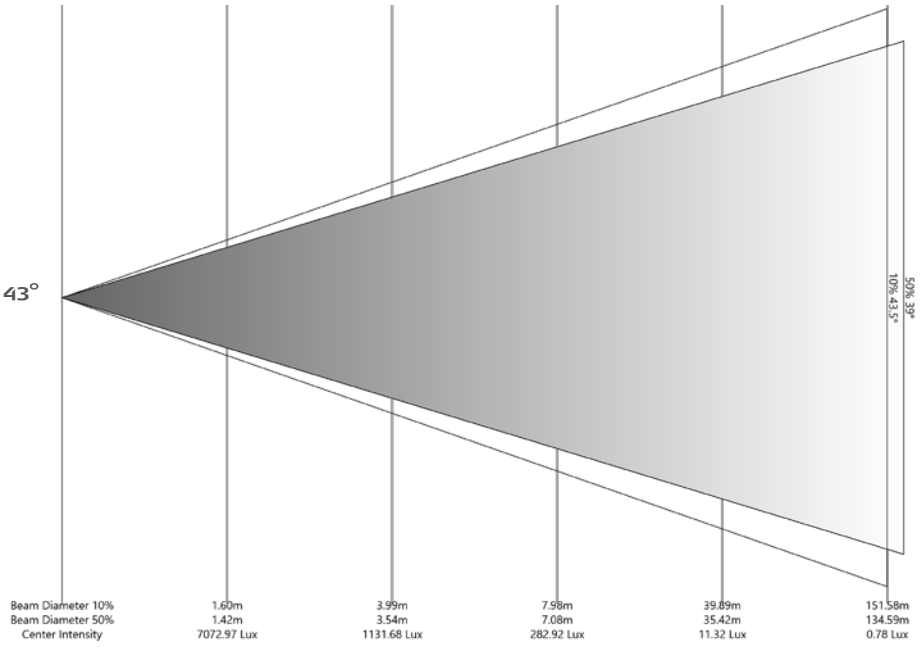

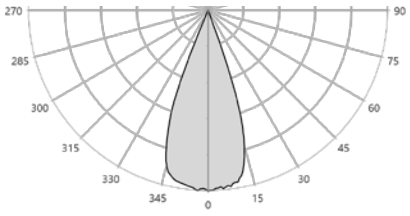

Dimensions

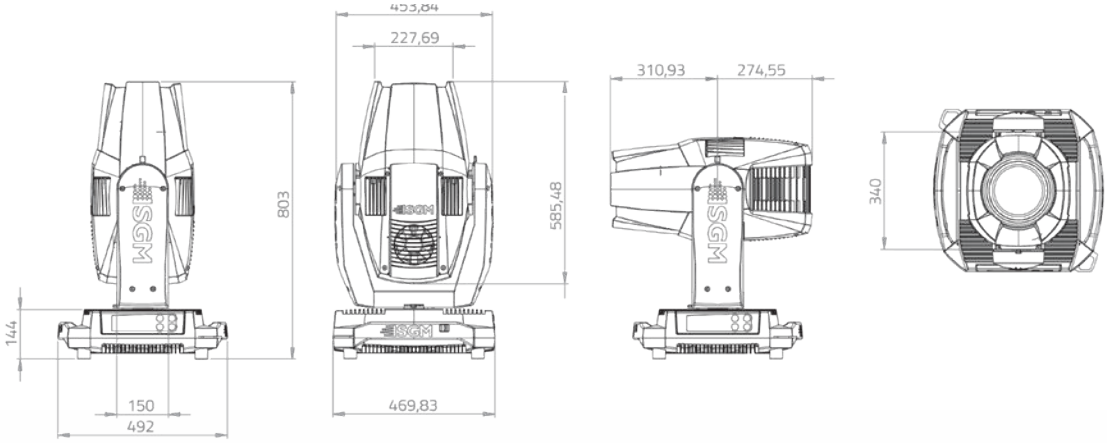

Connection diagram

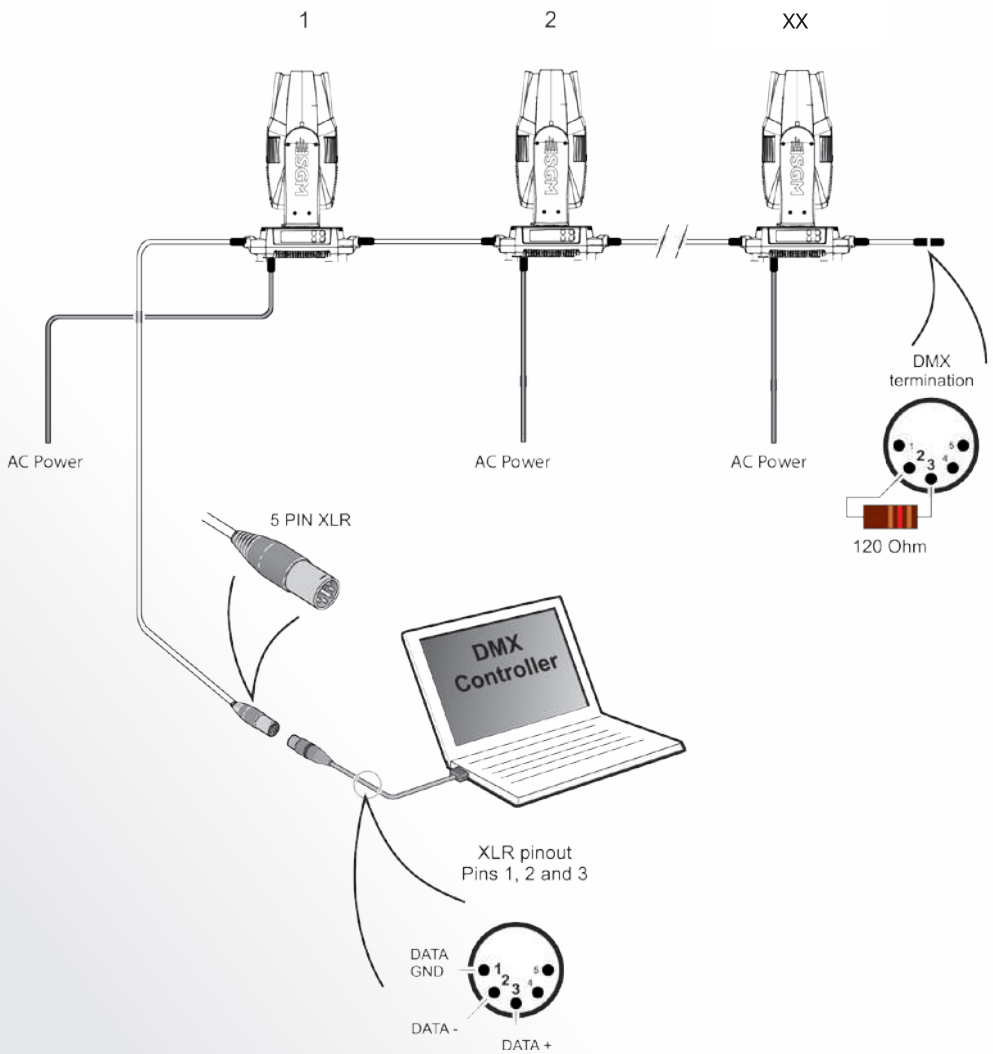

G•Profile
Specifications

Optics	Light source	High-power RGBY LED
	LEDs expected lifetime	50,000 hours*
	Zoom range, 16 bit	8° to 43° + pseudo zoom 1° to 43°
	Prism	4-facet rotating prism
	Frost	Variable 0% - 100%
Photometric	Light output	10,000 lm (all LEDs on)**
		2,500 lm (red)**
		2,600 lm (green)**
		1,200 lm (blue)**
	Color temperature range	2,000K - 10,000K
	Efficacy	10.5 lm/W
Gobos	Outside diameter	37.5 mm (Standard E size gobo)
	Maximum image diameter	30 mm
	Maximum thickness	1.1 mm black & white or 3.5 mm colored glass or textured gobos
	Glass gobo	Borosilicate high-temperature glass
	Metal gobo	Not recommended
Features	Iris	1-100%, Pulse effects
	Dimming	Electronic
	Strobe	Ultra-high-speed strobe effect (1-50Hz)
	Pan / Tilt	540° / 270°
	Gobo wheels	1 rotatable gobo wheels: 5 indexable gobos + open
	Framing	Rotatable framing module, +/- 45°
		4 controllable shutter blades, individually adjustable +/- 30°
	Effect wheel	Effect wheel, continuous rotation with variable speed and direction
Electrical	AC power, nominal	100 - 240V 50/60 Hz
	AC power, max. rating	100 - 264V 50/60 Hz
	Power supply unit	Auto-ranging electronic switch-mode
	Main fuse	T12A-250V
	Max. power consumption	1100 W
	Standby power	75 W
Programming and control	Protocol	USITT DMX512A
	Setting and addressing	Control panel, RDM or RFID
	Stand alone mode	Up to 24 programmable scenes
	Wireless DMX	LumenRadio with RDM
	16-bit control	Dimmer, colors, pan/tilt, gobo index/rotation, framing blades/rotation, zoom, focus
	Color temperature control	2,000K - 10,000K
	DMX channels	31/46
Physical	Dimensions	Length (base): 470 mm (18.5 in.)
		Length (head): 585 mm (23 in.)
		Width (base): 492 mm (19.4 in.)
		Width (head): 458 mm (18 in.)
		Height (head straight up): 805 mm (31.6 in.)
		Height (maximum): 821 mm (32.3 in.)
	Weight	52 kg (114 lbs.)
	Material	Aluminium, Steel, Plastic PA6.6
	IP class	IP65
Installation	Mounting points	Four times two quarter-turn locking points
	Orientation	Any
	Safety features	2 x attachment points for safety wire
		Minimum distance to combustible materials: 0.3mtr (11 In.)
		Minimum distance to illuminated surfaces: 0.3mtr (11 In.)
Thermal	Temperature range, Operating	−40° to +50°C (-40° to +122°F)
	Temperature range, Start-up	−20° to +50°C (-4° to +122°F)
	Temperature range, Storage	−40° to +80°C (-40° to +176°F)
	Humidity	98%
	Cooling	Active
Connections	AC power input	Neutrik true1 power input connector
	DMX data in/out	IP65 Neutrik HD locking XLR 5-pin cable, 0.2m (7.8 in)
Certified to	CSA E60598-1, Ed: 2	
	CSA-E598-2-17-98, Ed: 1	
Conforms to	UL Std. 1573	
	2014/35/EU: Low Voltage Directive	EN 60598-1, EN 60598-2-17, EN 62471, EN 60529
	2014/30/EU: EMC Directive	EN 55103-1, EN 55103-2, EN 61000-3-2, EN 61000-3-3
	RoHS2 Directive	2011/65/EU
Included items	Included items	Two Omega brackets with 1/4-turn fasteners
		2 mtrs. power cable with Neutrik true1 power connector
		User manual
Fixtures and accessories	Fixtures	Order no: 80021010 - G-Profile Moving Head, Std, BL
		Order no: 80021015 - G-Profile Moving Head, Std, WH
		Order no: 80021019 - G-Profile Moving Head, Std, CU
	Wireless transmitter	Order no: 80070229 - Lumen Radio CRMX transmitter (DMX only)
	Cables	Order no: 83062011 - SGM USB uploader cable
		Order no: 07860040 - 2m power cable with Neutrik TRUE1
	Bracket	Order no: 83060602 - Omega bracket
	Flightcase	Order no: 82051003 - Single flightcase G-Profile Moving Head

**Figures provided by manufacturer and obtained under manufacturer's test conditions*

***Goniometer Scan / SGM Illumination Lab 1.6.0.0*

BL = Black (RAL 9004)

WH = White (RAL 9010)

CU = Custom Color (Any RAL color)

VELVETY
SMOOTH WASH

IP65 RoHS CE

The G·Wash

LED moving head based on the popular G-Spot

The G-Wash is the third in the G-series of LED moving heads based on the popular G-Spot. It is designed for events and architectural installations that require bright colors and noiseless operation.

Equipped with a Fresnel lens, it has a large zoom area and comes with a beam shaper.

Because of its resilient IP65-rated housing, the G-Wash is practically maintenance-free. An occasional wipe of the exterior lens is all it takes to prepare the G-Wash for the next show. Being fully RDM compatible makes it suitable for installation in non-accessible locations.

The G-Series moving heads are proven to have the brightest colors for fixtures in their category.

Features

- The brightest colors
- Powerful LED light source
- Low power consumption (proportional to supply)
- Aesthetic Danish design
- No noise, no stray light
- Humidity elimination
- Long lifetime
- Configuration via RFID from smartphone
- Excellent optical features
- Ultra high-speed strobe effect
- Easy linking with wireless DMX
- Universal connection possibilities
- High-precision pan and tilt
- Dynamic color temperature correction
- Electronic dimming
- Rotating and indexable beam shaper
- Practically maintenance-free

LUX diagram All on Narrow and Wide

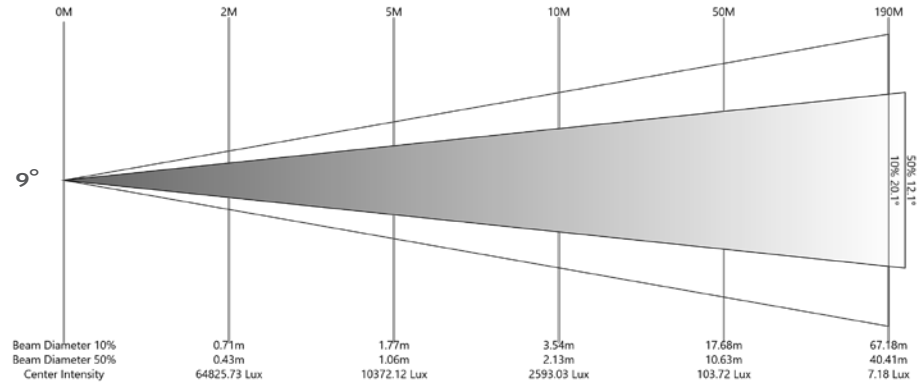

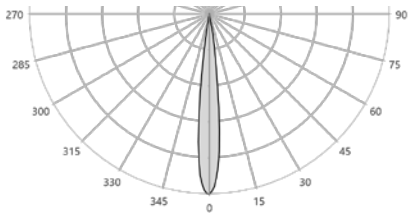

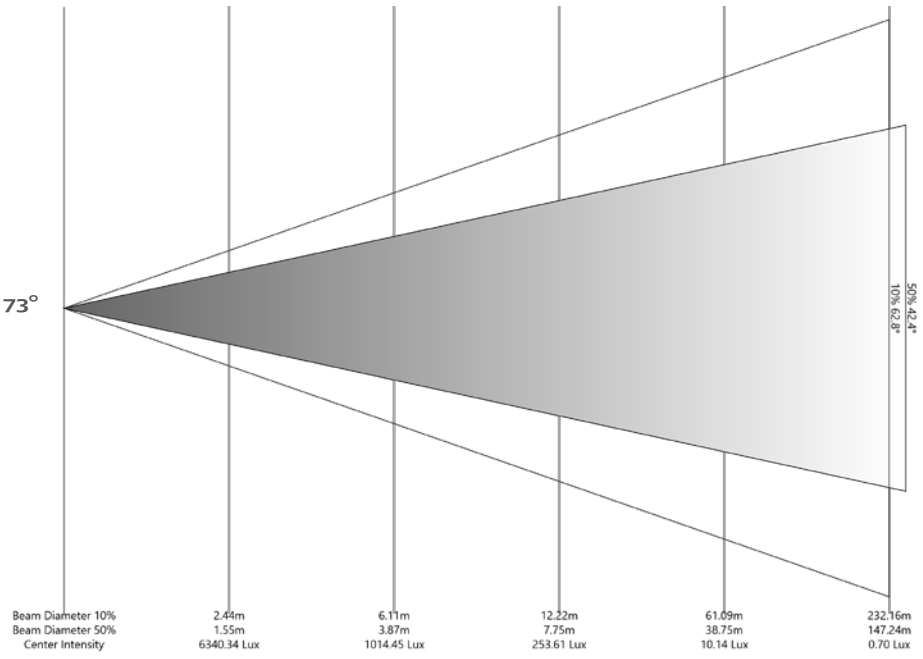

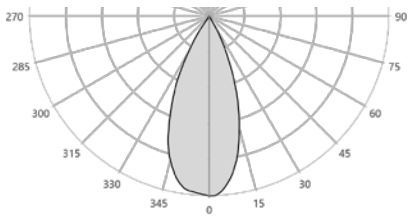

Dimensions

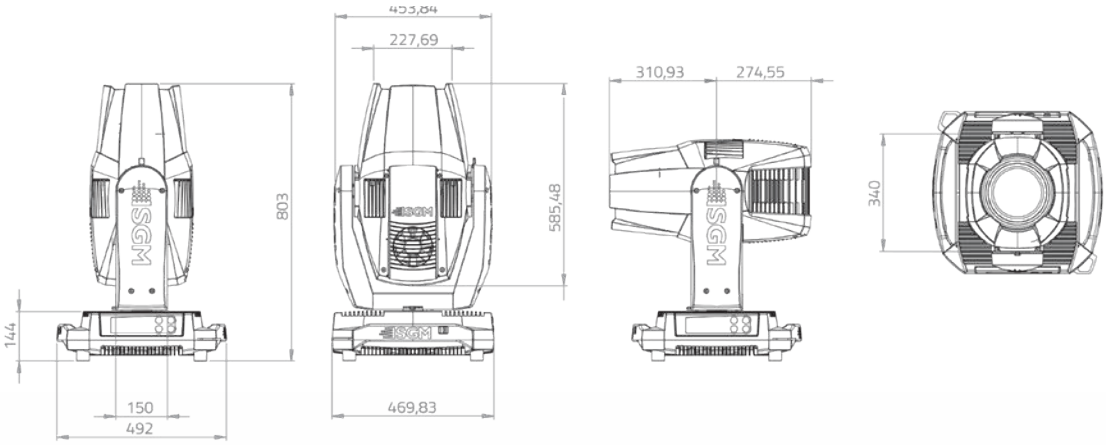

Connection diagram

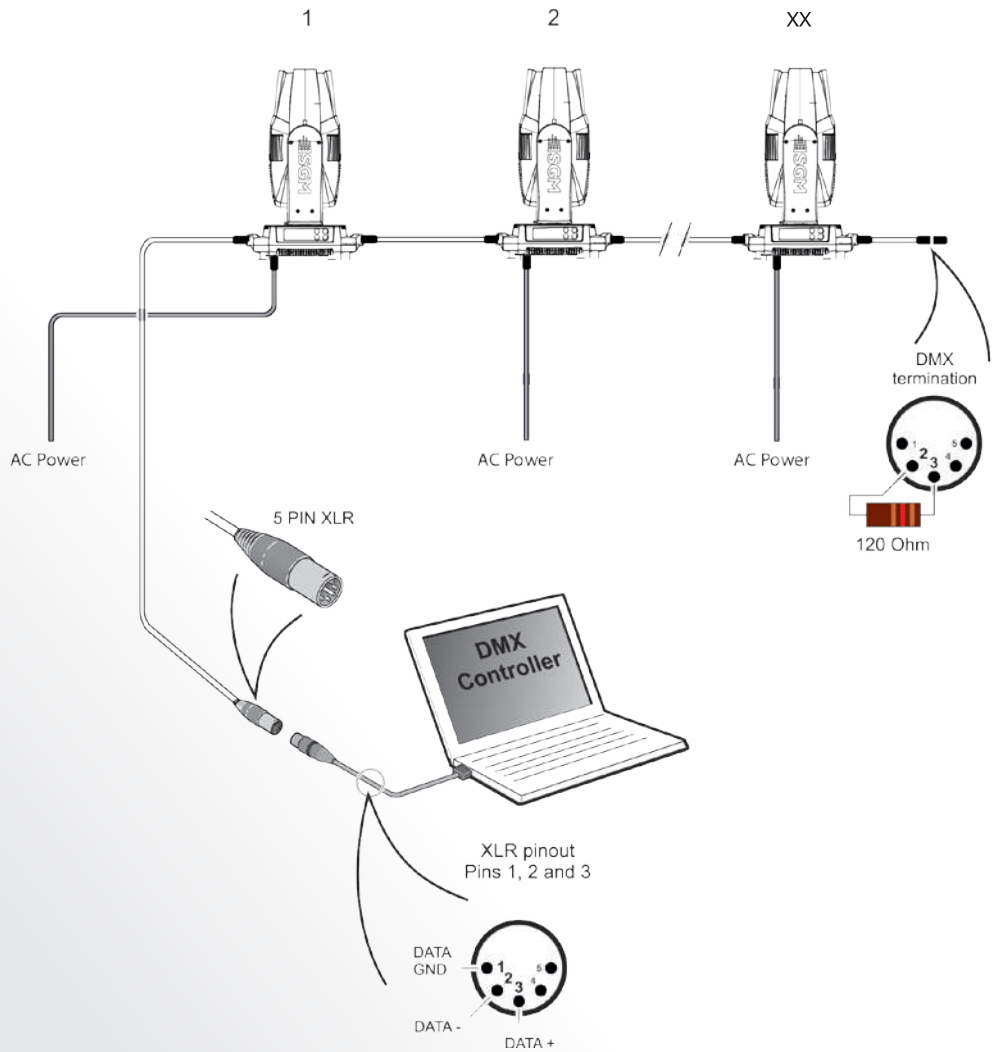

G•Wash
Specifications

Optics	Light source	High-power RGBY LED
	LEDs expected lifetime	50,000 hours*
	Beam angle	9° to 73°
	Beam shaper	Rotating and indexable
	Variable aperture	Intensity optimized / projection optimized
	Fresnel lens diameter	200 mm (7.87 in.)
Photometric	Total output	13,500 lm (all LEDs on) **
		3,800 lm (red)**
		3,800 lm (green)**
		1,400 lm (blue)**
	Color temperature range	2,000K - 10,000K
	Efficacy	14 lm/W
	Beam 50% angle	9° to 46°
	Beam 10% angle	73° to 15°
Features	Dimming	Electronic
	Strobe	Ultra-high-speed strobe effect (1-50Hz)
	Pan/Tilt	540° / 270°
	Dehumidifier	Base / Head
Electrical	AC Power, nominal	200 - 240V 50/60 Hz
	AC Power, max. Rating	190 - 264V 50/60 Hz
	Power supply unit	Auto-ranging electronic switch-mode
	Main fuse	T12A-250V
	Max. power consumption	1,100 W
	Standby power	75 W
Programming and Control	Protocol	USITT DMX512A
	Setting and addressing	Control panel, RDM or RFID
	Wireless DMX	LumenRadio with RDM
	Standalone mode	Up to 24 programmable scenes
	16-bit control	Dimmer, color, pan/tilt, beam shaper index/rotation, zoom, focus
	Color temperature control	2,000K - 10,000K
	DMX channels	16, 19
Physical	Dimensions	Length (base): 470 mm (18.5 in.)
		Length (head): 585 mm (23 in.)
		Width (base): 492 mm (19.4 in.)
		Width (head): 458 mm (18 in.)
		Height (head straight up): 805 mm (31.6 in.)
		Height (maximum): 821 mm (32.3 in.)
	Weight	49 kg (108 lbs.)
	Material	Aluminium, steel, plastic PA6.6
	IP class	IP65
	Color options	White – RAL 9010
		Black – RAL 9004
		Custom color – any RAL
Installation	Mounting points	Four times two quarter-turn locking points
	Orientation	Any
	Safety features	2 x attachment points for safety wire
		Minimum distance to combustible materials: 0.3 mtr (11 In.)
		Minimum distance to illuminated surfaces: 0.3 mtr (11 In.)
Thermal	Temperature range, Operating	–40° to +50°C (-40° to +122°F)
	Temperature range, Start-up	–20° to +50°C (-4° to +122°F)
	Temperature range, Storage	–40° to +80°C (-40° to +176°F)
	Humidity	98%
	Cooling	Active
Connections	DMX data in/out	IP65 Neutrik HD locking XLR 5-pin cable, 0.2m (7.8 in)
	Power	Neutrik true1 power input connector
Conforms to	2014/35/EU: Low Voltage Directive	EN 60598-1, EN 60598-2-17, EN 62471, EN 60529
	2014/30/EU: EMC Directive	EN 55103-1, EN 55103-2, EN 61000-3-2, EN 61000-3-3
	RoHS2 Directive	2011/65/EU
Included items	Included items	Two Omega brackets with 1/4-turn fasteners
		2 mtrs. Power Cable with Neutrik true1 power connector
		User manual
Fixtures and accessories	Fixtures	Order no: 80021101 - G-Wash Moving Head, Std, BL
		Order no: 80021105 - G-Wash Moving Head, Std, WH
		Order no: 80021109 - G-Wash Moving Head, Std, CU
	Wireless transmitter	Order no: 80070229 - Lumen Radio CRMX transmitter (DMX only)
	Cables	Order no: 83062011 - SGM USB uploader cable
		Order no: 07860040 - 2m power cable with Neutrik TRUE1
	Bracket	Order no: 83060602 - Omega bracket
	Flightcase	Order no: 82051008 - Single flightcase G-Wash

**Figures provided by manufacturer and obtained under manufacturer's test conditions*

***Goniometer Scan / SGM Illumination Lab 1.6.0.0*

BL = Black (RAL 9004)

WH = White (RAL 9010)

CU = Custom Color (Any RAL color)

NO STRINGS
ATTACHED

IP65 RoHS CE

The G·1 Beam

LED moving head with battery option

The ground-breaking G-1 Beam LED moving head offers numerous cutting-edge features in a physically compact chassis.

A sharply defined, flat and uniform beam that operates rapidly and provides intense mid-air beam effects through a high-power white LED light source and a color wheel as well as a gobo wheel. The results are high contrast levels and an extreme brightness. Adding to its uniqueness, this moving head is not only IP65-rated and maintenance-free, but also offers the exclusive choice of being either battery-driven with an impressive 10-12 hours of operation in typical use or being connected via wired mains power.

It provides a staggering output of 62,000 lux at a 3-meter distance and a color temperature of 6,500K on pure white light. The G-1 Beam is equipped with a 2.8° fixed beam angle; however, it can deliver an aperture pseudo zoom adjustable down to 0.3°. Its motorized focus is both fast and precise.

Using USITT DMX512 standard, the G-1 Beam can be controlled via wireless DMX or via cabling.

The G-1 Beam comes in two variants; with or without the base unit. With the base, one to three batteries can be inserted and thus positioning is not dependent on the proximity of any power source, and the IP65-rating ensures no need of bulky domes for outdoor application. Without the base, the G-1 Beam can be mounted onto the ceiling or a rig in e.g. a club environment for powerful and bright beam effects and high-speed movements, using an external power supply.

Features

- High-power white LED light source
- Sharply defined beam in speedy operation
- IP65-rated and maintenance-free
- Noiseless
- Super narrow beam for punchy mid-air effects or extreme range gobo projection
- On-board battery power (10-12 hours) or wired mains power
- Choice of wired or wireless DMX
- Patent pending position preset programming
- High contrast levels and extreme brightness
- Fast and precise motorized focus
- Lightweight and aesthetic Danish design
- Compact chassis
- Rapid endless pan and 240˚ tilt
- Gobo wheel with 19 gobos + 2 times open + oscillation effect
- Color wheel with 14 colors + open
- Low power consumption of max. 50 W
- 2.8˚ beam angle with an aperture zoom adjustable down to 0.3˚
- Built-in macro effects
- Internal standalone programs
- Practically maintenance-free

High applicability

- Outdoor events
- Festivals
- Shopping centres
- Weddings
- Conferences
- Concerts and tour productions
- Shops and showrooms
- Red-carpet shows
- TV productions
- Clubs
- Stages
- Any event requiring gobo projections

LUX diagram White

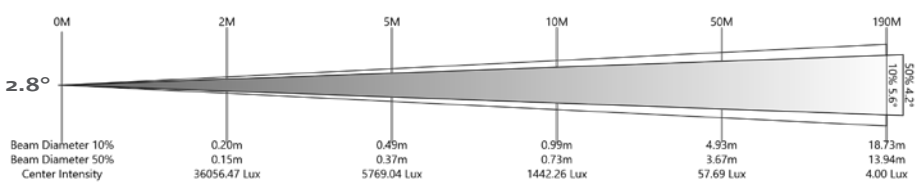

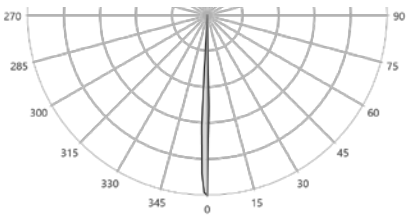

Dimensions

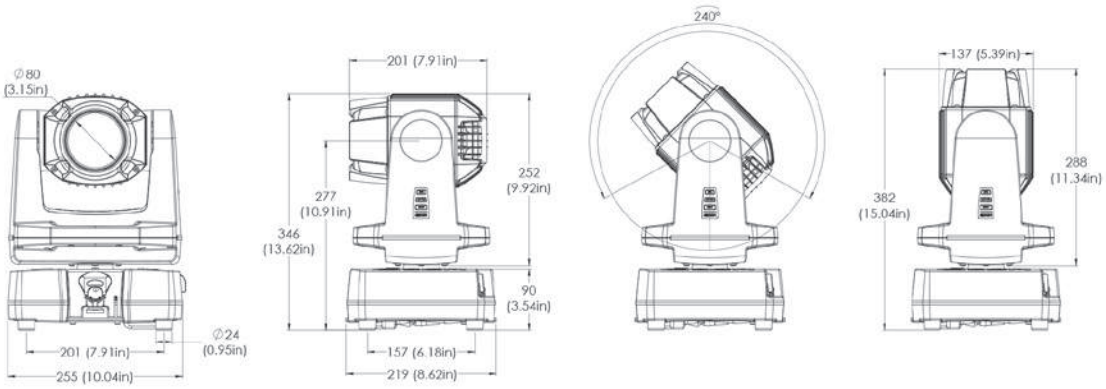

Connection diagram

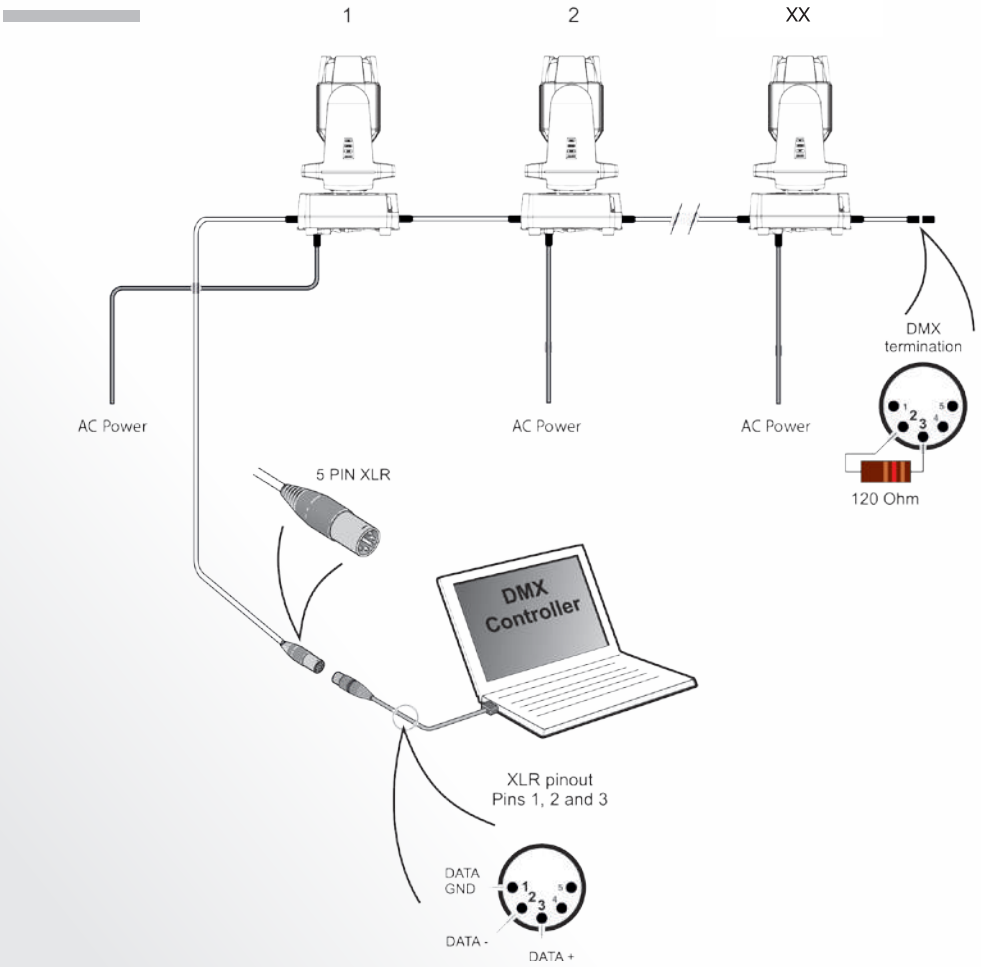

Gobo wheel

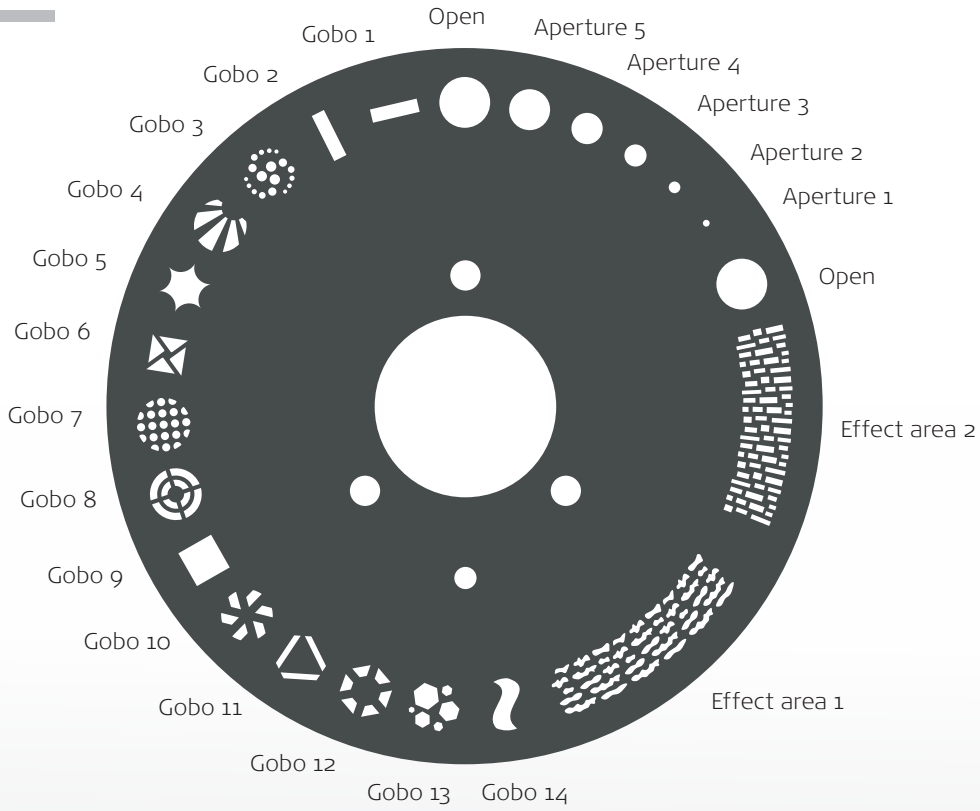

Color wheel

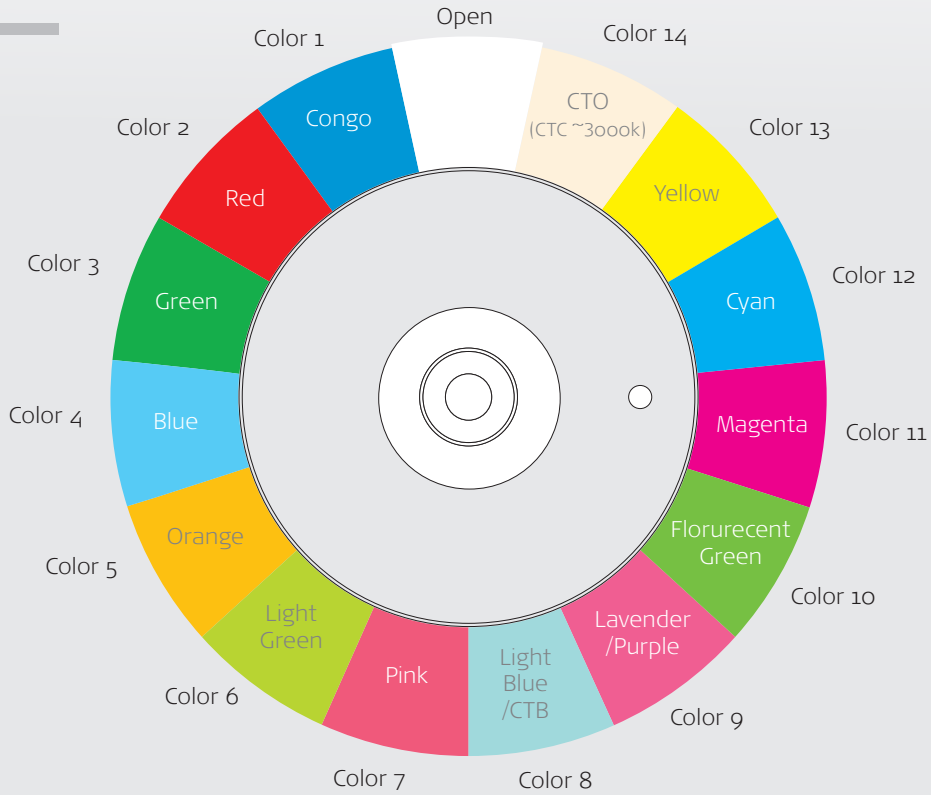

G•1 Beam
Specifications

Optics	Light source	High-power white LED (6,500K)
	LEDs expected lifetime	50,000 hours*
	Beam angle(s)	2.8°
		0.3°(Aperture pseudo zoom)
	Focus	Motorized focus
Photometric	Light source output	62,000 lux at 3 m (9.8 ft.)*
	Color temperature	6,500K
Gobos	Gobo wheel	19 gobos + 2 times open
		Two oscillation gobo effect areas
		Gobo shake
		Continuous scroll CW & CCW
Colors	Color wheel	14 colors + open
		Split color
		Continuous scroll CW & CCW
Features	Dimming	Electronic
	Strobe	Ultra-high-speed strobe effect (1-50 Hz)
	Pan / tilt	Endless / 240°
	Pan modes:	540°, 360°, 360° shortest path, continuous CW, continuous CCW
	Built-in macro effects	50
	Battery status	Battery level indicator
Electrical incl. base	AC power, nominal	100-240V 50/60 Hz
	AC power, max. rating	90-264V 50/60 Hz
	Maximum inrush current @ 100VAC	2.2Amp
	Maximum inrush current @ 240VAC	6.9Amp
	Power supply unit	Auto-ranging electronic switch-mode
	Max. power consumption	50W
	Standby power	8W
Battery	Battery type	Lithium-Ion battery
	Battery capacity (non-stop)	7-9 hours
	Battery capacity (typical use)	12-14 hours
	Battery charge time up to 70%	8-12 hours
	Battery charge time up to 100%	12-16 hours
	Durability	>500 full charge cycles
	Memory effect	85% battery capacity after 500 full charge cycles
Electrical excl. base	AC power, nominal	24VDC
	Max. power consumption	50W
Programming and control	Protocol	USITT DMX512A
		CRMX, W-DMX™ G2, W-DMX™ G3, W-DMX™ G4, W-DMX™ G4S
	Setting and addressing	RDM
		Display/control panel
		Software upgradable with SGM USB uploader cable (P/N:83062011)
	Standalone mode	8 internal standalone programs
		9 internal pan / tilt presets
	Wireless DMX	LumenRadio CRMX
	Cabled DMX	5 pin XLR input/output
	16-bit control	Dimmer, pan and tilt
	DMX channels	12
Physical	Dimensions	Length (base): 219 mm (8.62 in.)
		Length (head incl. yoke): 288 mm (11.34 in.)
		Width (base): 255 mm (10.04 in.)
		Width (head): 150 mm (5.9 in.)
		Height (base): 90 mm (3.54 in.)
		Height (head straight up): 382 mm (15.04 in.)
	Weight (incl. 3 batteries)	8.9 kg (19.6 lbs.)
	Weight (excl. batteries)	8.0 kg (17.6 lbs.)
	Material	Aluminium, steel, plastic PC/ASA, rubber
	IP class	IP65
	Color options	White – RAL 9010
		Black – RAL 9004
		Custom color – any RAL
Installation	Mounting points	Two quarter-turn locking points for one Omega bracket
	Orientation	Any
	Safety features	2 x attachment points for safety wire
		Minimum distance to combustible materials: 0.3 m (11 in.)
		Minimum distance to illuminated surfaces: 0.3 m (11 in.)
Thermal	Temperature range, Operating	–40° to +50°C (-40° to +122°F)
	Temperature range, Start-up	–20° to +50°C (-4° to +122°F)
	Temperature range, Storage	–40° to +80°C (-40° to +176°F)
	Humidity	98%
	Cooling	Passive
Connections	AC power input	Neutrik TRUE1 power input connector
	DMX data in/out	IP65 Neutrik HD locking XLR 5-pin cable, 0.2 m (7.8 in.)
Conforms to	UL Std. 1573	
	2014/35/EU: Low Voltage Directive	EN 60598-1, EN 60598-2-17, EN 62471, EN 60529
	2014/30/EU: EMC Directive	EN 55103-1, EN 55103-2, EN 55015, EN 61547, EN 61000-3-2, EN 61000-3-3
	RoHS2 Directive	2011/65/EU
Included items	Included items	One Omega bracket with 1/4-turn fasteners
		2 m power cable with Neutrik TRUE1 power connector
		User manual
Fixtures and accessories	Fixtures	Order no: 80100101 - G-1 Beam, Std, BL, (excl. Batt)
		Order no: 80100111 - G-1 Beam, Std, WH, (excl. Batt)
		Order no: 80100191 - G-1 Beam, Std, CU, (excl. Batt)
		Order no: 80100103 - G-1 Beam, Std, BL, (incl. 3 pcs Batt)
		Order no: 80100113 - G-1 Beam, Std, WH, (incl. 3 pcs Batt)
		Order no: 80100193 - G-1 Beam, Std, CU, (incl. 3 pcs Batt)
	Battery	Order no: 83061708 - Battery, Nominal: 21,6V - Nominal: 3350 mAh (1 pcs.)
	Wireless transmitter	Order no: 80070229 - Lumen Radio CRMX transmitter (DMX only)
	Cables	Order no: 83062011 - SGM USB uploader cable
		Order no: 07860040 - 2 m power cable with Neutrik TRUE1
	Bracket	Order no: 83060602 - Omega bracket
		Order no: 83061707 - Ceiling mount for G-1
	Flightcase	Order no: 82051004 - Flightcase for 4 pcs. G-1 Beam
		Order no: 82051005 - Flightcase for 4 pcs. G-1 Beam incl. charger
		Order no: 42000297 - Charger cable kit for G-1 flightcase (4 pcs.)

**Figures provided by manufacturer and obtained under manufacturer's test conditions*

***Photometrics / SGM Illumination Lab 1.6.0.0*

BL = Black (RAL 9004) / WH = White (RAL 9010) / CU = Custom Color (Any RAL color)

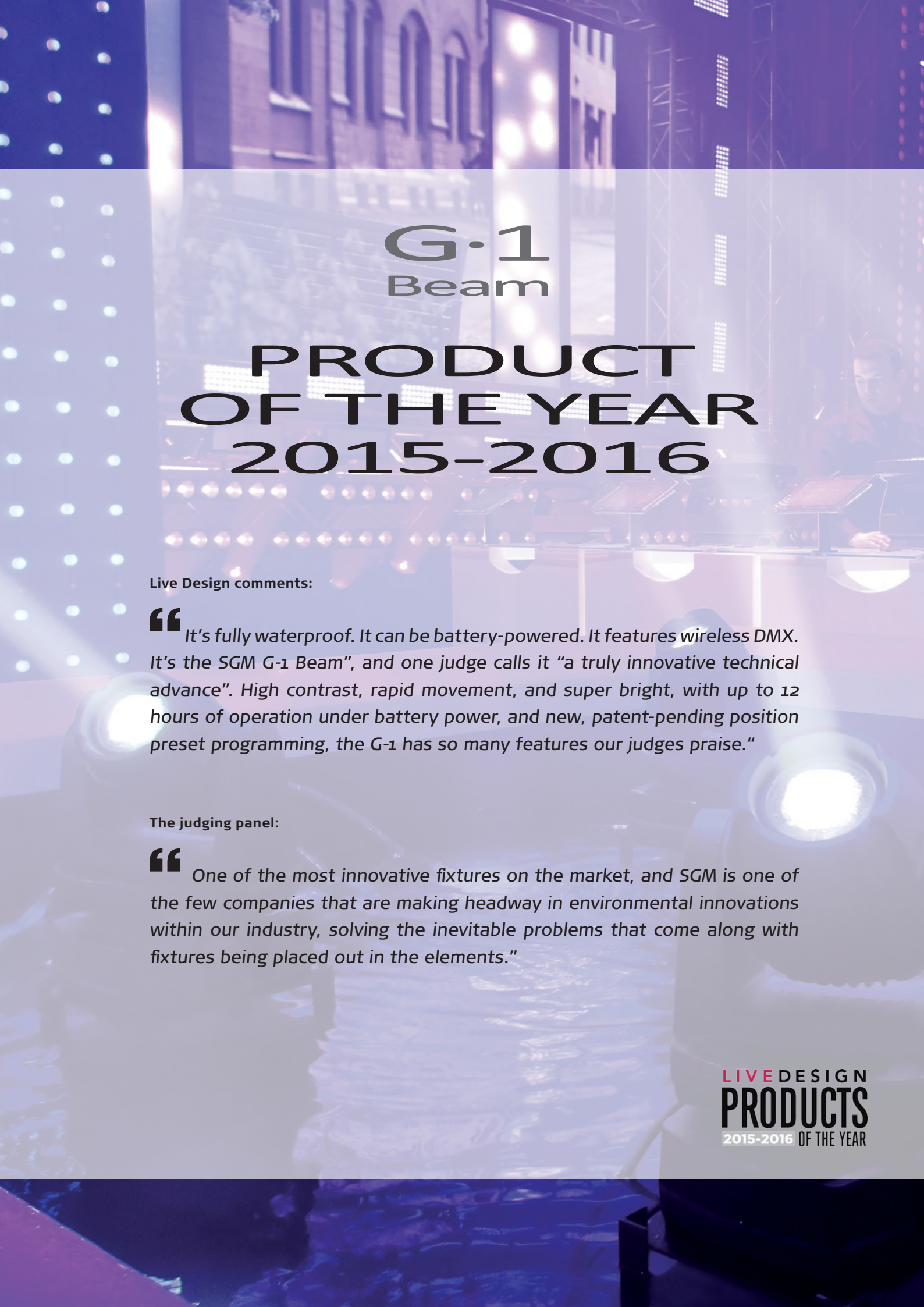

G·1 Beam

PRODUCT OF THE YEAR 2015–2016

Live Design comments:

"It's fully waterproof. It can be battery-powered. It features wireless DMX. It's the SGM G-1 Beam", and one judge calls it "a truly innovative technical advance". High contrast, rapid movement, and super bright, with up to 12 hours of operation under battery power, and new, patent-pending position preset programming, the G-1 has so many features our judges praise."

The judging panel:

"One of the most innovative fixtures on the market, and SGM is one of the few companies that are making headway in environmental innovations within our industry, solving the inevitable problems that come along with fixtures being placed out in the elements."

LIVEDESIGN PRODUCTS 2015-2016 OF THE YEAR

IDEAL G-1 BEAM
COMPANION

IP65 RoHS CE

The G·1 Wash

LED moving head with battery option

Battery-driven LED wash moving head in a physically compact chassis.

A velvety smooth, flat and uniform beam that operates rapidly in every movement, provides intense mid-air beam effects through 19 high-power red, green, blue and white LEDs. The results are high contrast levels and an extreme brightness. Adding to its uniqueness, this moving head is not only IP65-rated and maintenance-free, but also offers the exclusive choice of being either battery-driven, with an impressive 10-12 hours of operation in typical use or being connected wired mains power.

It provides a high output of 5,000 lux at 3-meter distance. The G-1 Wash is equipped with a 8.5° fixed beam angle. Using USITT DMX512 standard, the G-1 Wash can be controlled via wireless DMX or via cabling.

The G-1 Wash comes in two variants; with or without the base unit. With the base, one to three batteries can be inserted and thus positioning is not dependent on the proximity of any power source, and the IP65-rating ensures no need of bulky domes for outdoor application. Without the base, the G-1 Wash can be mounted onto the ceiling or a rig in e.g. a club environment for powerful and bright beam effects and high-speed movements, using an external power supply.

Features

- High-power R, G, B, W LED light source
- Velvety smooth beam in speedy operation
- IP65-rated and maintenance-free
- Noiseless
- Narrow beam for punchy mid-air effects
- On-board battery power (10-12 hours) or wired mains power
- Choice of wired or wireless DMX
- Patent pending position preset programming
- Extremely bright with full color mixing
- Lightweight and aesthetic Danish design
- Compact chassis
- Rapid endless pan and 240° tilt
- Low power consumption of max. 60 W
- 8.5° beam angle
- Built-in macro effects
- Internal standalone programs
- Practically maintenance-free
- Dynamic color temperature correction

High applicability

- Outdoor events
- Festivals
- Shopping centres
- Weddings
- Conferences
- Concerts and tour productions
- Shops and showrooms
- Red-carpet shows
- TV productions
- Clubs
- Stages
- Any event requiring gobo projections

LUX diagram White

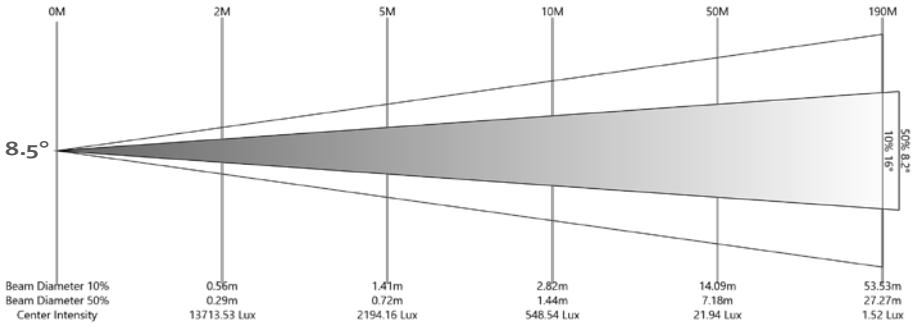

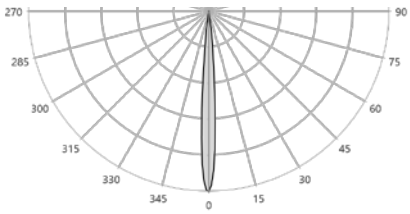

Dimensions

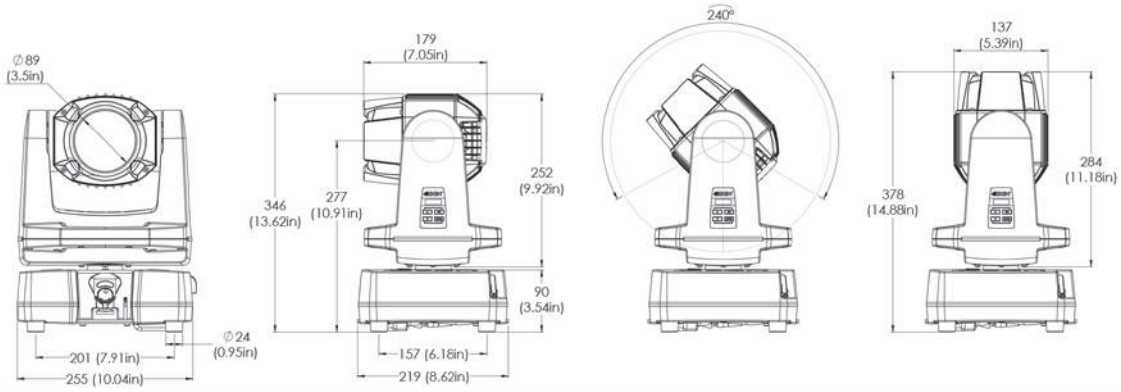

Connection diagram

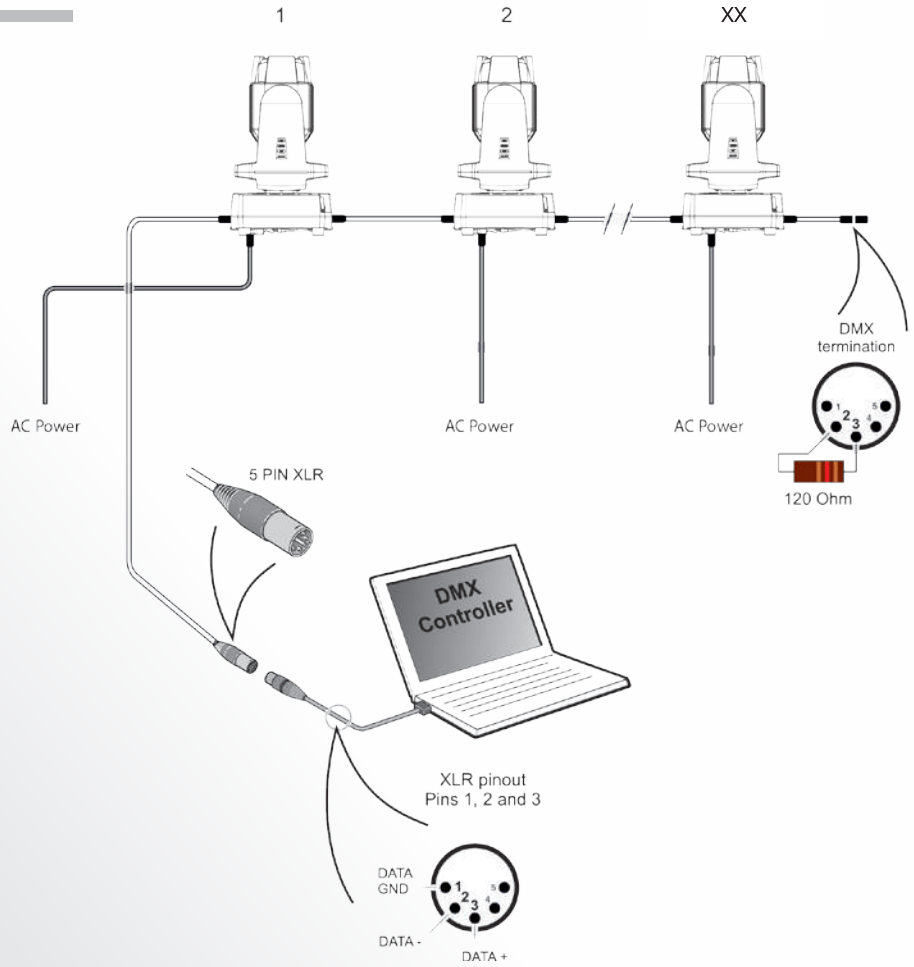

G•1 Wash
Specifications

Optics	Light source	19 LEDs in total
		Red 4 pcs.
		Green 4 pcs.
		Blue 4 pcs.
		White 7 pcs. (5,700K)
	LEDs expected lifetime	50,000 hours*
	Beam angle(s)	8.5°
Photometric	Total output	5,000 lux at 3 m (9.8 ft.)**
Features	Dimming	Electronic
	Strobe	Ultra-high-speed strobe effect (1-50 Hz)
	Pan / tilt	Endless / 240°
	Pan modes:	540°, 360°, 360° shortest path, continuous CW, continuous CCW
	Built-in macro effects	50
	Battery status	Battery level indicator
Electrical incl. base	AC power, nominal	100-240V 50/60 Hz
	AC power, max. rating	90-264V 50/60 Hz
	Maximum inrush current @ 100VAC	2.2Amp
	Maximum inrush current @ 240VAC	6.9Amp
	Power supply unit	Auto-ranging electronic switch-mode
	Max. power consumption	60W
	Standby power	8W
Battery	Battery type	Lithium-Ion battery
	Battery capacity (non-stop)	6-8 hours
	Battery capacity (typical use)	12-14 hours
	Battery charge time up to 70%	8-12 hours
	Battery charge time up to 100%	12-16 hours
	Durability	>500 full charge cycles
	Memory effect	85% battery capacity after 500 full charge cycles
Electrical excl. base	AC power, nominal	24VDC
	Max. power consumption	60W
Programming and control	Protocol	USITT DMX512A
		CRMX, W-DMX™ G2, W-DMX™ G3, W-DMX™ G4, W-DMX™ G4S
	Setting and addressing	RDM
		Display/control panel
		Software upgradable with SGM USB uploader cable (P/N:83062011)
	Stand alone mode	8 internal stand alone programs
		9 internal programmable pan / tilt presets
	Wireless DMX	LumenRadio CRMX
	Cabled DMX	5 pin XLR input/output
	16-bit control	Dimmer, pan and tilt
	DMX channels	13
Physical	Dimensions	Length (base): 219 mm (8.62 in.)
		Length (head incl. yoke): 288 mm (11.34 in.)
		Width (base): 255 mm (10.04 in.)
		Width (head): 150 mm (5.9 in.)
		Height (base): 90 mm (3.54 in.)
		Height (head straight up): 382 mm (15.04 in.)
	Weight (incl. 3 batteries)	8.6 kg (19 lbs.)
	Weight (excl. batteries)	7.7 kg (17 lbs.)
	Material	Aluminium, steel, plastic PC/ASA, rubber
	IP class	IP65
	Color options	White – RAL 9010
		Black – RAL 9004
		Custom color – any RAL
Installation	Mounting	Two quarter-turn locking points for one Omega bracket
	Orientation	Any
	Safety features	2 x attachment points for safety wire
		Minimum distance to combustible materials: 0.3 m (11 in.)
		Minimum distance to illuminated surfaces: 0.3 m (11 in.)
Thermal	Temperature range, Operating	–40° to +50°C (-40° to +122°F)
	Temperature range, Start-up	–20° to +50°C (-4° to +122°F)
	Temperature range, Storage	–40° to +80°C (-40° to +176°F)
	Humidity	98%
	Cooling	Passive
Connections	AC power input	Neutrik TRUE1 power input connector
	DMX data in/out	IP65 Neutrik HD locking XLR 5-pin cable, 0.2 m (7.8 in.)
Conforms to	2014/35/EU: Low Voltage Directive	EN 60598-1, EN 60598-2-17, EN 62471, EN 60529
	2014/30/EU: EMC Directive	EN 55103-1, EN 55103-2, EN 55015, EN 61547, EN 61000-3-2, EN 61000-3-3
	RoHS2 Directive	2011/65/EU
Included items	Included items	One Omega bracket with 1/4-turn fasteners
		2 m power cable with Neutrik TRUE1 power connector
		User manual
Fixtures and accessories	Fixtures	Order no: 80100301 - G-1 Wash, Std, BL, (excl. Batt)
		Order no: 80100311 - G-1 Wash, Std, WH, (excl. Batt)
		Order no: 80100391 - G-1 Wash, Std, CU, (excl. Batt)
		Order no: 80100303 - G-1 Wash, Std, BL, (incl. 3 pcs. Batt)
		Order no: 80100313 - G-1 Wash, Std, WH, (incl. 3 pcs. Batt)
		Order no: 80100393 - G-1 Wash, Std, CU, (incl. 3 pcs. Batt)
	Battery	Order no: 83061708 - Battery, Nominal: 21,6V - Nominal: 3,350 mAh (1 pcs)
	Wireless transmitter	Order no: 80070229 - Lumen Radio CRMX transmitter (DMX only)
	Cables	Order no: 83062011 - SGM USB uploader cable
		Order no: 07860040 - 2 m power cable with Neutrik TRUE1
	Bracket	Order no: 83060602 - Omega bracket
		Order no: 83061707 - Ceiling mount for G-1
	Flightcase	Order no: 82051006 - Flightcase for 4 pcs. G-1 Wash
		Order no: 82051007 - Flightcase for 4 pcs. G-1 Wash incl. charger
		Order no: 42000297 - Charger cable kit for G-1 flightcase (4 pcs.)

**Figures provided by manufacturer and obtained under manufacturer's test conditions*

***Photometrics / SGM Illumination Lab 1.6.0.0*

BL = Black (RAL 9004) / WH = White (RAL 9010) / CU = Custom Color (Any RAL color)

THE NEW
WORKHORSE

IP65 RoHS

The G·4 Wash

Fresnel LED Wash Light

The G-4 Wash is a lightweight and compact high-power Fresnel wash light with superb color mixing and very low power consumption. Unlike most conventional wash lights, the G-4 Wash comprises red, green, blue, amber and mint LEDs that mix directly in the light source. Additionally, it has a dichroic enhancer that creates a deep blue (Congo blue), delivering a very saturated blacklight effect.

With a CRI of more than 90 (typically 93), the G-4 Wash delivers the most amazing color rendering of any wash light on the market today. It is not only powerful in colors but also impressive in white. Equipped with a Fresnel lens, the G-4's optical system is designed to deliver a staggering output and equally perfect color mixing with a completely even field with no hotspot.

The IP65-rated exterior of G-4 Wash and the built-in dehumidifier keep the G-4 Wash free of externally induced impact on internal optics and light source unit, making the fixture ideal for outdoor applications.

With an impressive zoom range of 9°-76°, the G-4 Wash enables designers to create tight beams and powerful washes, as well as everything in-between.

The G-4 wash can be remotely configured, controlled and monitored via RDM.

Features

- High-power light source made up of red, green, blue, amber and mint LEDs
- Superb color mixing
- CRI > 90 (typically 93)
- High-speed tilt and continuous pan
- Fully color-calibrated
- No green spike
- Smooth superb, stepless dimming
- Extremely low noise
- Low power consumption
- Wireless control and configuration via RDM
- 10 kg (22 lbs.)
- Small and compact
- IP65-rated
- Dehumidification
- Practically maintenance-free
- Easily installable top hat with magnetic fastening

LUX diagram All on Narrow and Wide

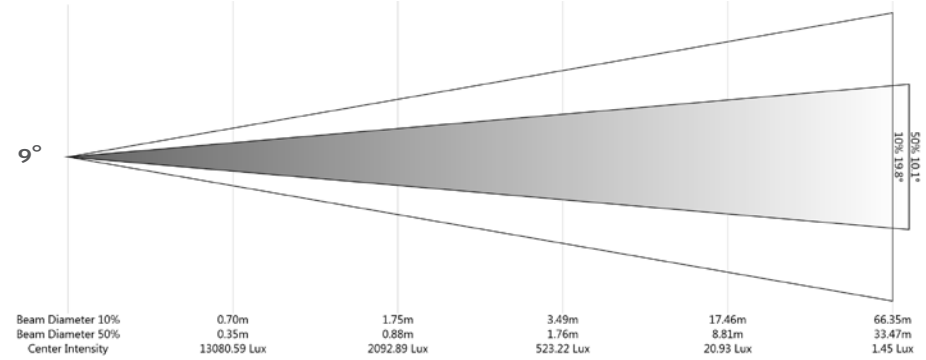

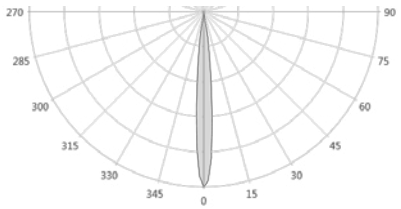

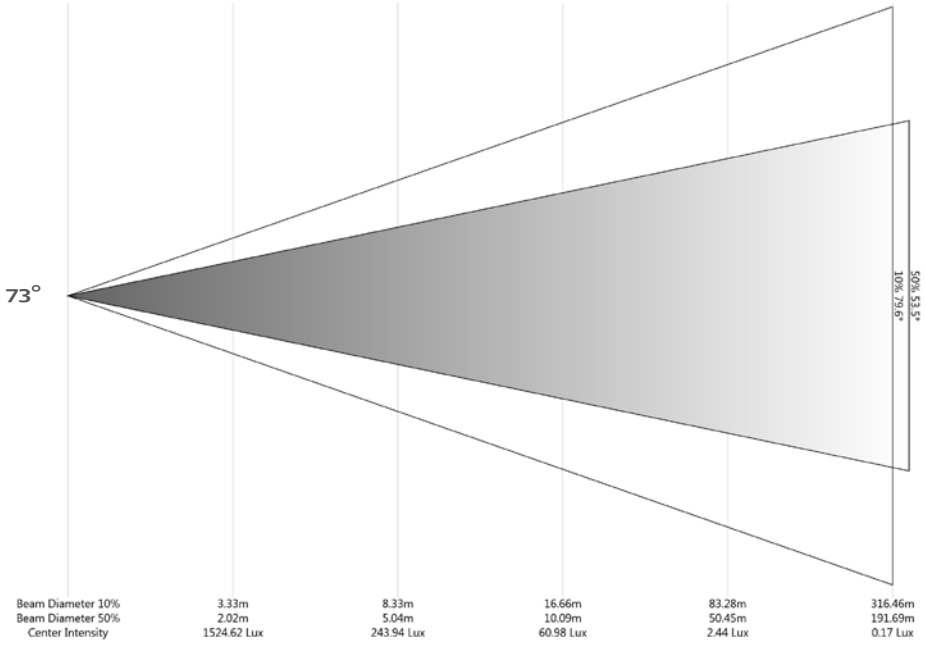

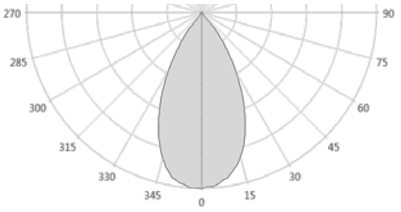

Dimensions

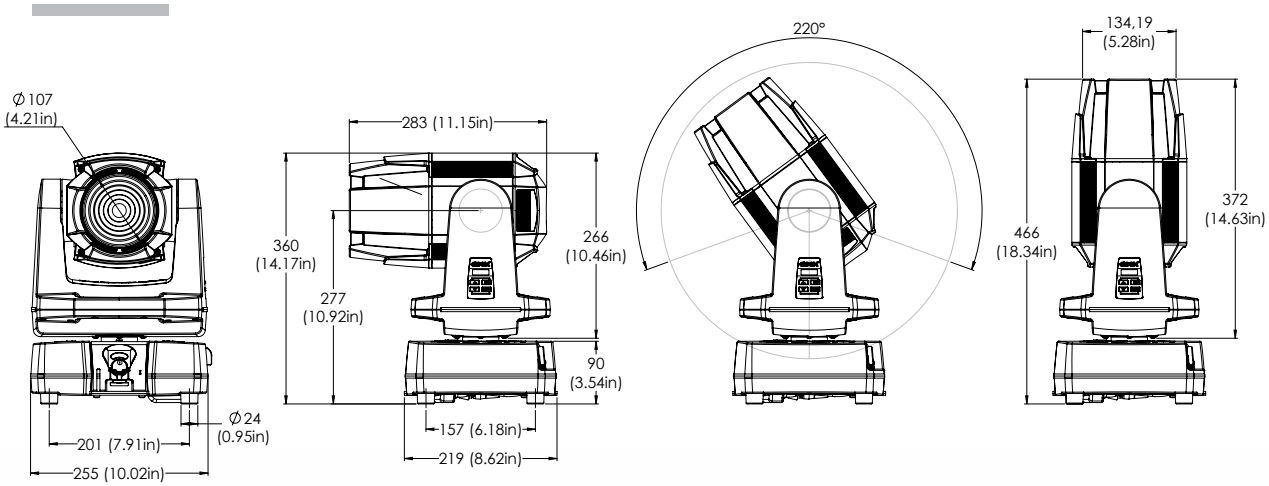

Connection diagram

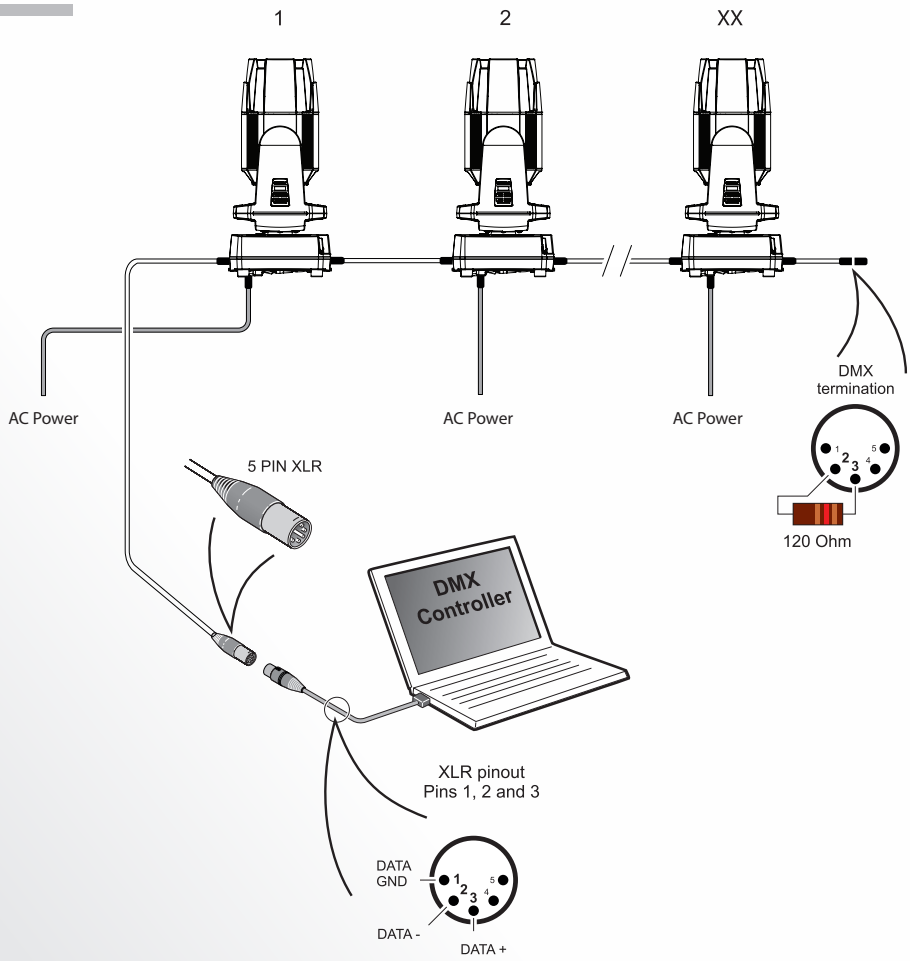

G•4 Wash
Preliminary specifications

Optics	Light source	5 color 150 W
	LEDs expected lifetime	50,000 hours*
	Motorized zoom	9° to 76°
Photometric	Total output	6,300 lm (all LEDs on)**
	Color temperature range	2,000K - 10,000K
	CRI	> 90 (typically 93)
Features	Dimming	Electronic
	Strobe	Ultra high-speed strobe effect (1-50 Hz)
	Pan / Tilt	Endless / 220°
	Pan modes	540°, 360°, 360° shortest path, continuous CW, continuous CCW
Electrical	AC power, nominal	100 - 277V, 50/60 Hz
	AC power, max. rating	90-305V, 50/60 Hz
	Power supply unit	Auto-ranging electronic switch-mode
	Max. inrush current	40A
	Max. power consumption	220 W
	Standby power	9 W
Programming and control	Protocol	USITT DMX512A
		CRMX, W-DMX™ G2, W-DMX™ G3, W-DMX™ G4, W-DMX™ G4S
	Setting and addressing	RDM
		Display / control panel
		Software upgradable with USB uploader cable (P/N:83062011)
	Standalone mode	8 internal standalone programs
		9 internal pan / tilt presets
	Wireless DMX	LumenRadio CRMX
	Cabled DMX	5 pin XLR input/output
	16 bit control	Dimmer, pan and tilt
	DMX channels	14
Physical	Dimensions	Width (base) 255 mm (10.04 in)
		Width (head) 150 mm (5.9 in)
		Height (base) 90 mm (3.54 in)
		Height (head straight up) 465 mm (18.04)
	Weight	10 kg (22 lbs)
	Material	Aluminium, steel, plastic, PC/ASA, rubber
	IP class	IP65
	Color options	White – RAL 9010
		Black – 9004
		Custom color any RAL
Installation	Mounting points	Two quarter-turn locking points for one Omega bracket
	Orientation	Any
	Safety features	2 x attachment points for safety wire
		Minimum distance to combustible materials: 0.3 m (11 In.)
		Minimum distance to illuminated surfaces: 0.3 m (11 In.)
Thermal	Temperature range, Operating	–40° to +50°C (-40° to +122°F)
	Temperature range, Start-up	–20° to +50°C (-4° to +122°F)
	Temperature range, Storage	–40° to +80°C (-40° to +176°F)
	Humidity	98%
	Cooling	Passive
Connections	AC power input	Neutrik true1 power input connector
	DMX data in/out	IP65 Neutrik HD locking XLR 5-pin cable, 0.2 m (7.8 in)
Conforms to	2014/35/EU: Low Voltage Directive	EN 60598-1, EN 60598-2-17, EN 62471, EN 60529
	2014/30/EU: EMC Directive	EN 55103-1, EN 55103-2, EN 55015, EN 61547, EN 61000-3-2, EN 61000-3-3
	RoHS2 Directive	2011/65/EU
Included items	Included items	1 Omega bracket with 1/4-turn fasteners
		2 m power cable with Neutrik true1 power connector
		User manual

**Figures provided by manufacturer and obtained under manufacturer's test conditions*

***Goniometer Scan / SGM Illumination Lab 1.6.0.0*

STRO
LIGH

BETS

X•5

XC•5

STROBE LIGHTS

STUNNING
EFFECTS

RoHS CE

The X·5

Bright LED strobe

Experience extremely high luminous output of nearly 3,000 pure white LEDs placed into three individually controllable LED segments. The X-5 makes it possible to create unique effects never before delivered by a strobe.

The X-5 is a lightweight, compact and ultra-high performance LED strobe with an exceptionally low power consumption of only 4A. The X-5 is a robust, state-of-the-art LED fixture providing an alternative to traditional, expensive and fragile Xenon lamps.

Use of the X-5 will result in advantages such as the utilisation of less cabling and lower maintenance cost. The X-5 delivers maximum effect at a lower life cycle cost compared to traditional strobes.

Features

- Cutting-edge, high-performance strobe with low power consumption
- USITT DMX 512 A and RDM configurable
- 3 individually controllable LED segments
- Great alternative to traditional strobes
- User-friendly setup via simple control buttons and OLED display
- Standalone mode eliminating the need for dedicated controllers
- Noiseless operation
- Numerous mounting options and simple positioning
- Lightweight and aesthetic Danish design

High applicability

- Touring
- Clubs
- Theatrical
- TV shows
- Staging
- Rental

The X-5 patents

The X-5 is covered by several patents safeguarding the uniqueness of the product.

The X-5 is protected under Registered Community Design valid in Europe: **No. 001914094-0001/0030.** Furthermore, the X-5 is registered for **Design Patent** in the United States and China.

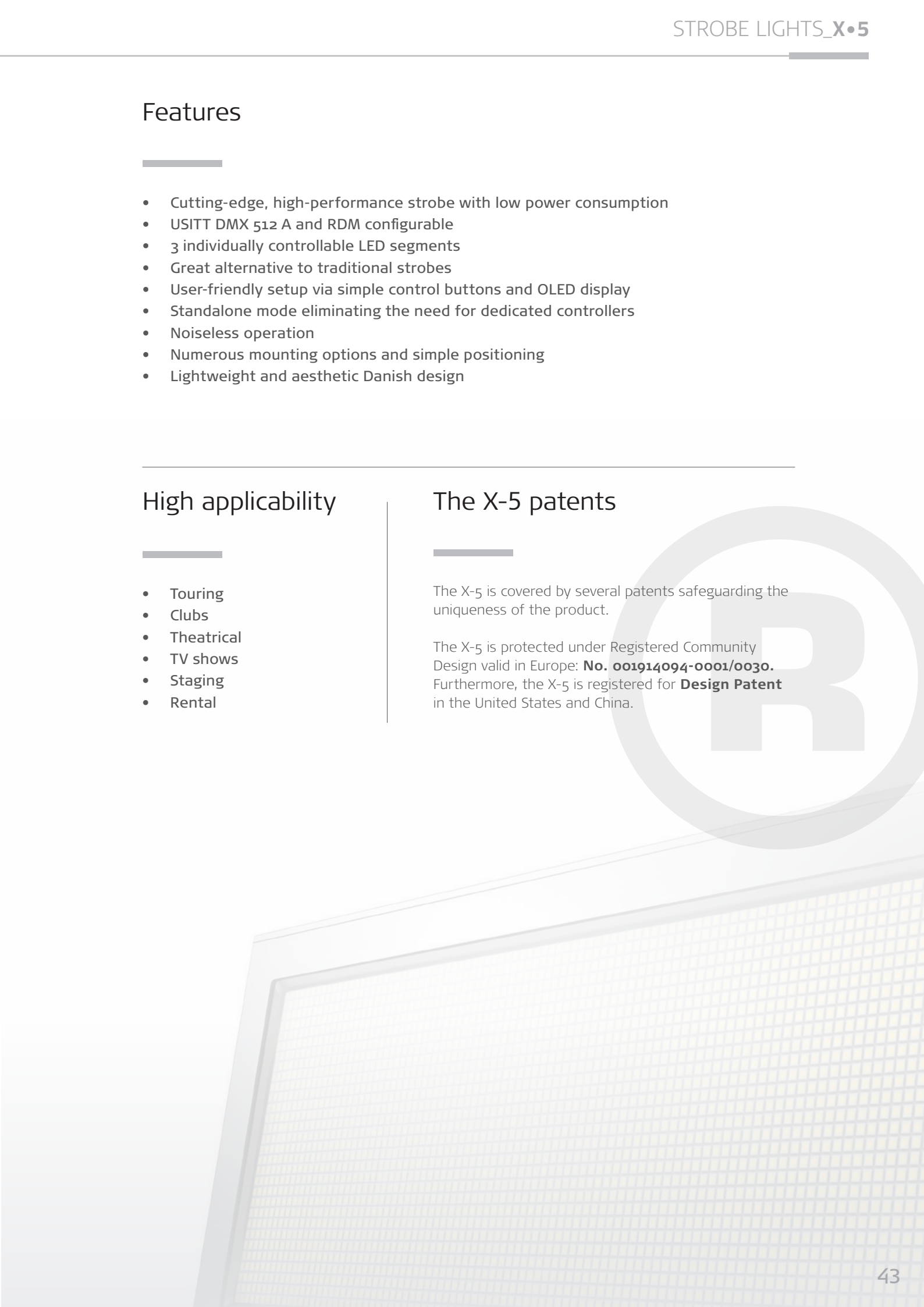

Dimensions

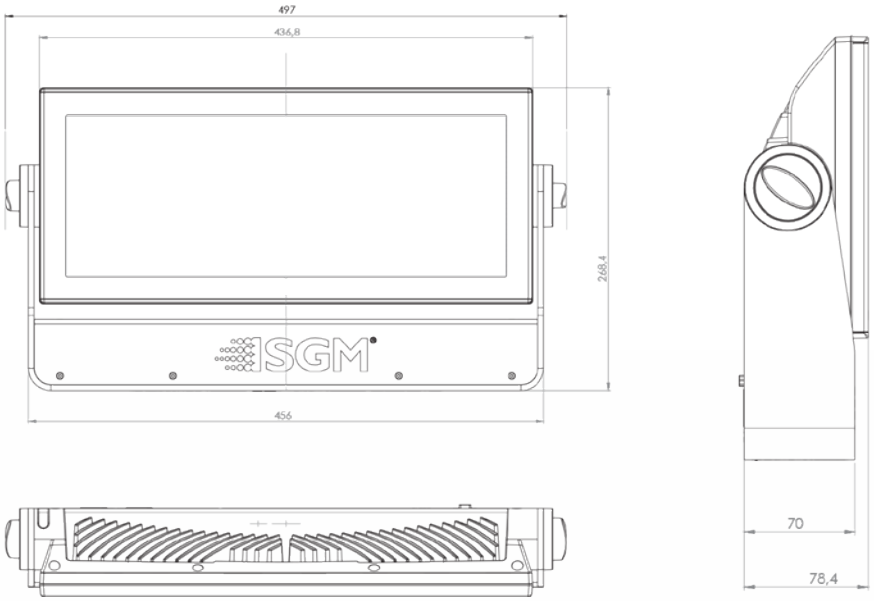

Connection diagram

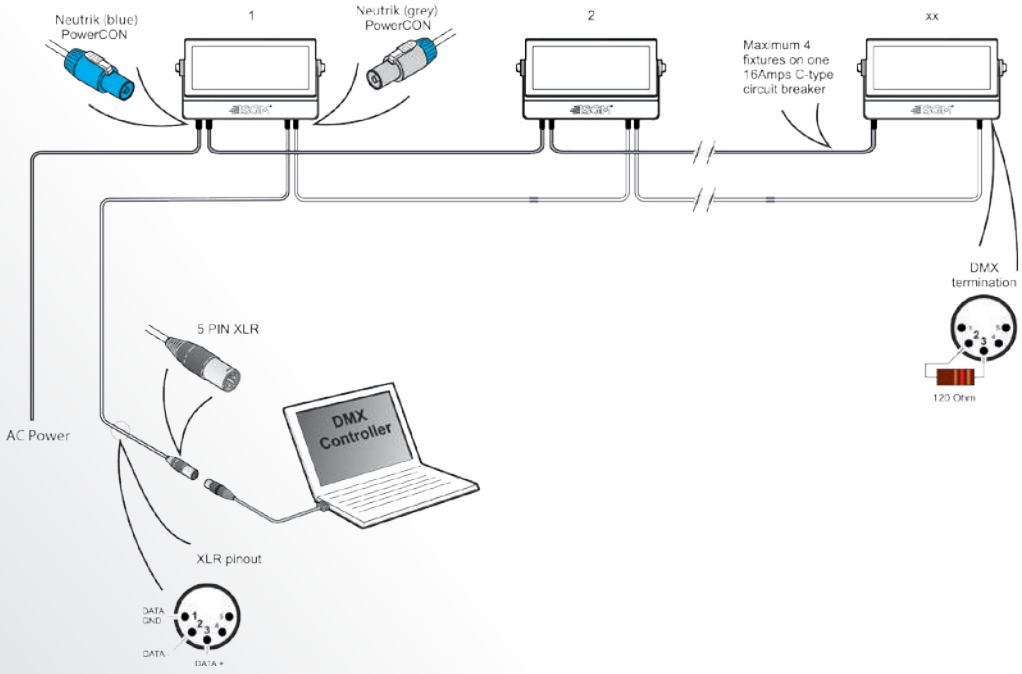

X•5
Specifications

Optics	Light source	2,970 x white LEDs
	LEDs expected lifetime	50,000 hours*
	Lens	120° fixed
Photometric	Color temperature	5,600K
Features	Tilt	0° - 110°
	LED panel	3 individually controllable segments
Electrical	AC power	208 - 240 V nominal 50/60 Hz
	Maximum inrush current @ 240VAC	22A
	Maximum power consumption	360 W
	Typical current consumption	4A
	Peak current consumption	21A
Programming and Control	Protocol	USITT DMX 512 A
	Setting and addressing	RDM
		Standalone mode
		OLED graphical display / 5 buttons
		Software upgradable with SGM USB uploader cable (P/N:83062011)
	DMX channels	1, 3, 4, 6 & 7
Physical	Dimensions (L x H x W)	500 x 270 x 90 mm (19.7 x 10.6 x 3.54 in)
	Weight	6.7 kg (14.8 lbs.)
	Material	Aluminium
	Lens	Tempered glass front
	IP class	IP20
Installation	Mounting points	Two quarter-turn locking points for one Omega bracket
	Orientation	Any
	Rigging possibilities	Floor stand (included) or hanging (Omega clamp included)
	Safety features	Bottom mount for safety wire
		Minimum distance to combustible materials: 0.3 m (11 in.)
		Minimum distance to illuminated surfaces: 0.3 m (11 in.)
Thermal	Temperature range, Operating	–40° to +50°C (-40° to +122°F)
	Temperature range, Start-up	–20° to +50°C (-4° to +122°F)
	Temperature range, Storage	–40° to +80°C (-40° to +176°F)
	Humidity (max.)	95%
	Cooling	Passive
Connections	Power	Neutrik powerCON inlet and link-thru
	DMX data in/out	5 pin XLR for DMX in and out
Certification	2014/35/EU: Low Voltage Directive	EN 60950-1, EN 62471
	2014/30/EU: EMC Directive	EN 55103-1, EN 55103-2, EN 61000-3-2, EN 61000-3-3
	RoHS2 Directive	2011/65/EU
Included items	Included items	Floor Stand (incl. screws)
		2 pcs Omega brackets
		2m power cable with Neutrik Powercon and bare ends
		User Manual
Fixtures and accessories	Fixtures	Order no: 80090001 - X-5 White LED Strobe
	Cables	Order no: 07860026 - 2m Power cable
		Order no: 83062011 - SGM USB uploader cable
	Brackets	Order no: 83060603 - BCC-2 Dual bracket
		Order no: 83060604 - BCC-4 Quad bracket
		Order no: 83060602 - Omega bracket
	Floorstand	Order no: 83060610 - Floorstand for i, P, Q and X series with 1/4-turn fasteners
	Barndoor	Order no: 83061119 - Accessory holder i-5 / P-5 Series
		Order no: 83061120 - Barndoor 4-way, i-5/P-5/X-5/Q-7 Series
		Order no: 83061121 - Barndoor 8-way, i-5/P-5/X-5/Q-7 Series
		Order no: 83061122 - Color frame, i-5/P-5/X-5/Q-7 Series
	Flightcase	Order no: 82051501 - Flightcase for 4 pcs. of i-5/P-5/Q-7/X-5
		Order no: 82051502 - Flightcase for 4 pcs. of i-5/P-5/Q-7/X-5 incl. barndoors

**Figures provided by manufacturer and obtained under manufacturer's test conditions*

AN OUTSTANDING
LED ALTERNATIVE

RoHS CE

The XC·5

Bright color LED strobe

With the X-5 we conceived the brightest white LED strobe. With the same technology we developed the XC-5 with a high luminous output of over 1,000 power RGB LEDs.

The XC-5 is a lightweight, compact and ultra high-performance LED RGB color strobe with an exceptionally low power consumption of only 4A. It is a robust, state-of-the-art LED fixture providing a true alternative to traditional, expensive and fragile Xenon lamps.

With the XC-5, the rules of the stroboscope concept have been re-written. Just imagine the possibilities of combining a strobe with RGB capabilities.

Housed in a black, slim aluminum chassis, the XC-5 contains a 120° lens, and setup is via the OLED 5-button graphic display.

Features

- Cutting-edge, high-performance LED RGB color strobe with low power consumption
- USITT DMX 512 A and RDM configurable
- Great alternative to traditional strobes
- User-friendly setup via simple control buttons and OLED display
- Standalone mode eliminating the need for dedicated controllers
- Noiseless operation
- Numerous mounting options and simple positioning
- Lightweight and aesthetic Danish design

High applicability

- Touring
- Clubs
- Theatrical
- TV shows
- Staging
- Rental

The XC-5 patents

The XC-5 is covered by several patents safeguarding the uniqueness of the product.

The XC-5 is protected under Registered Community Design valid in Europe: **No. 001914094-0001/0030.** Furthermore, the XC-5 is registered for **Design Patent** in the United States and China.

Dimensions

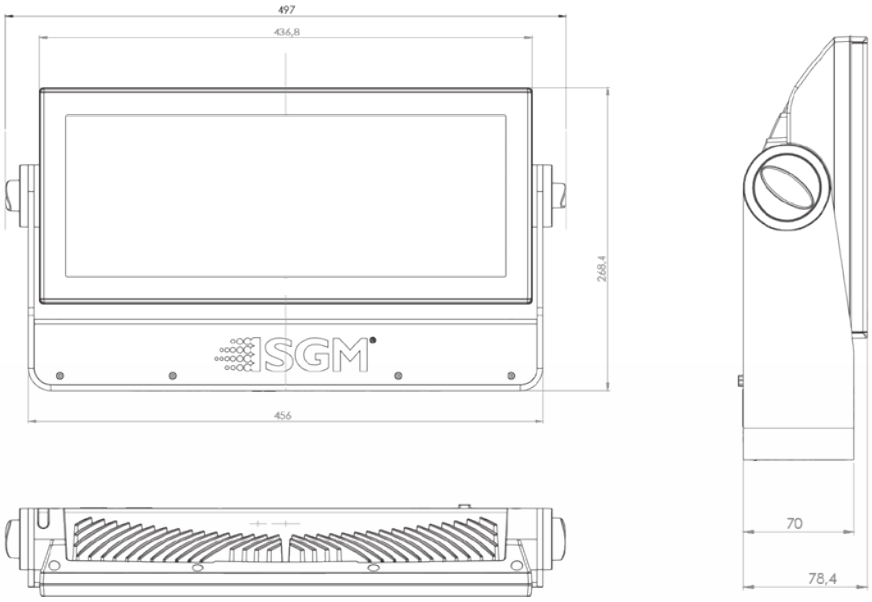

Connection diagram

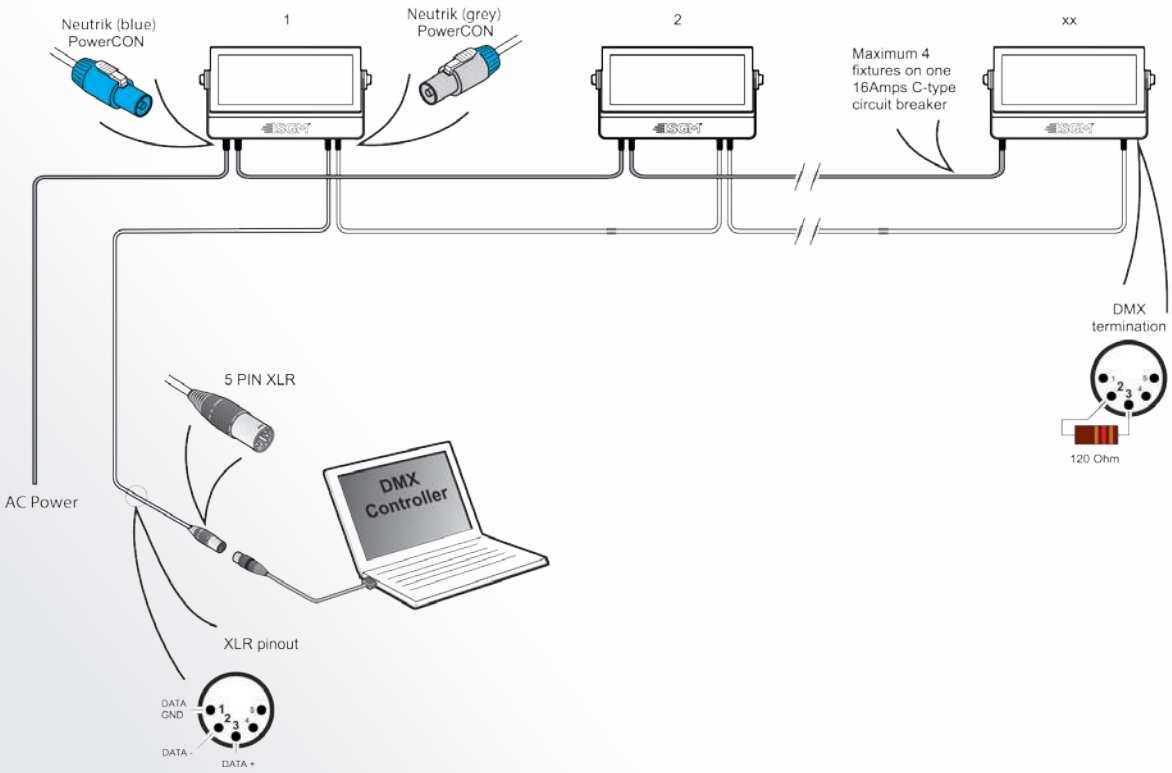

XC•5
Specifications

Optics	Light source	1,080 x RGB LEDs
	LEDs expected lifetime	50,000 hours*
	Lens	120° fixed
Features	Tilt	0° - 110°
Electrical	AC power	208 - 240 V nominal 50/60 Hz
	Maximum inrush current @ 240VAC	22A
	Maximum power consumption	360 W
	Typical current consumption	4A
	Peak current consumption	21A
Programming and control	Protocol	USITT DMX 512 A
	Setting and addressing	RDM
		Standalone mode
		OLED graphical display / 5 buttons
		Software upgradable with SGM USB uploader cable (P/N:83062011)
	DMX channels	1, 3, 4, 6 & 7
Physical	Dimensions (L x H x W)	500 x 270 x 90 mm (19.7 x 10.6 x 3.54 in)
	Weight	6.7 kg (14.8 lbs.)
	Material	Aluminium
	Lens	Tempered glass front
	IP class	IP20
Installation	Mounting points	Two quarter-turn locking points for one Omega bracket
	Orientation	Any
	Rigging possibilities	Floor stand (included) or hanging (Omega clamp included)
	Safety features	Bottom mount for safety wire
		Minimum distance to combustible materials: 0.3 m (11 in.)
		Minimum distance to illuminated surfaces: 0.3 m (11 in.)
Thermal	Temperature range, Operating	–40° to +50°C (-40° to +122°F)
	Temperature range, Start-up	–20° to +50°C (-4° to +122°F)
	Temperature range, Storage	–40° to +80°C (-40° to +176°F)
	Humidity (max.)	95%
	Cooling	Passive
Connections	Power	Neutrik powerCON inlet and link-thru
	DMX data in/out	5 pin XLR for DMX in and out
Certification	2014/35/EU: Low Voltage Directive	EN 60950-1, EN 62471
	2014/30/EU: EMC Directive	EN 55103-1, EN 55103-2, EN 61000-3-2, EN 61000-3-3
	RoHS2 Directive	2011/65/EU
Included items	Included items	Floor stand (incl. screws)
		2 pcs. Omega brackets
		2m power cable with Neutrik Powercon and bare ends
		User Manual
Fixtures and accessories	Fixtures	Order no: 80090002 - XC-5 Color LED Strobe
	Cables	Order no: 07860026 - 2m Power cable
		Order no: 83062011 - SGM USB uploader cable
	Brackets	Order no: 83060603 - BCC-2 Dual bracket
		Order no: 83060604 - BCC-4 Quad bracket
		Order no: 83060602 - Omega bracket
	Floorstand	Order no: 83060610 - Floorstand for i, P, Q , X series with 1/4-turn fasteners
	Barndoor	Order no: 83061119 - Accessory Holder i-5/P-5 Series
		Order no: 83061120 - Barndoor 4-way, i-5/P-5/X-5/Q-7 Series
		Order no: 83061121 - Barndoor 8-way, i-5/P-5/X-5/Q-7 Series
		Order no: 83061122 - Color frame, i-5/P-5/X-5/Q-7 Series
	Flightcase	Order no: 82051501 - Flightcase for 4 pcs. of i-5/P-5/Q-7/X-5
		Order no: 82051502 - Flightcase for 4 pcs. of i-5/P-5/Q-7/X-5 incl. Barndoors

**Figures provided by manufacturer and obtained under manufacturer's test conditions*

WASH
LIGHT

i•2 series

i•5 series

P•1

P•2

P•5 series

LIGHTS

Q·2 series
Q·7 series
SixPack

WASH

WASH, BLIND
STROBE LIGHT

IP65 RoHS CE

The i·2 Series

Brightness – even at long distances

The i-2 is a low-profile and compact LED wash light, designed for multiple applications including touring, broadcast and architectural installations.

With its 69 high-power LEDs, it is a powerful and adjustable multi-purpose fixture with a narrow beam angle of 8.5°.

The i-2's high output, small footprint and IP65-rating make it ideal for outdoor use. Equally, the high output combined with the narrow beam angle make the i-2 suitable for lighting up buildings, structures and facades – even at long distances.

The i-2 comes in five variants: RGBW, RED, GREEN, BLUE and WHITE.

Features

- Available in 5 variants
- Narrow 8.5° beam for extreme long-throw applications
- 69 high-power LEDs
- High output, low consumption
- User-friendly setup via simple control-buttons and OLED display
- Small footprint
- Suitable for multiple applications
- IP65-rated
- Practically maintenance-free
- Lightweight and aesthetic Danish design

Beam angles

Standard: 8.5°

Diffusion filters (optional): 18°, 40°, 60° x 10° (elliptical)

LUX diagram White

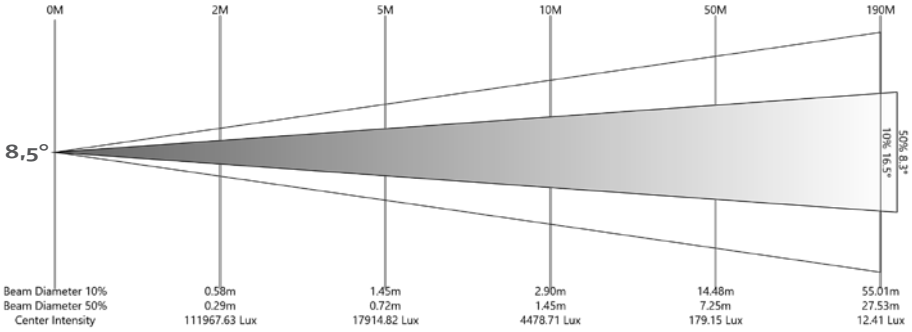

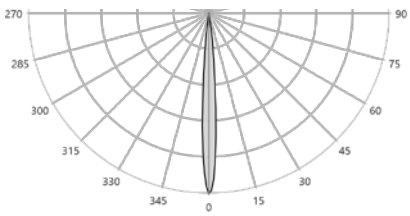

Dimensions

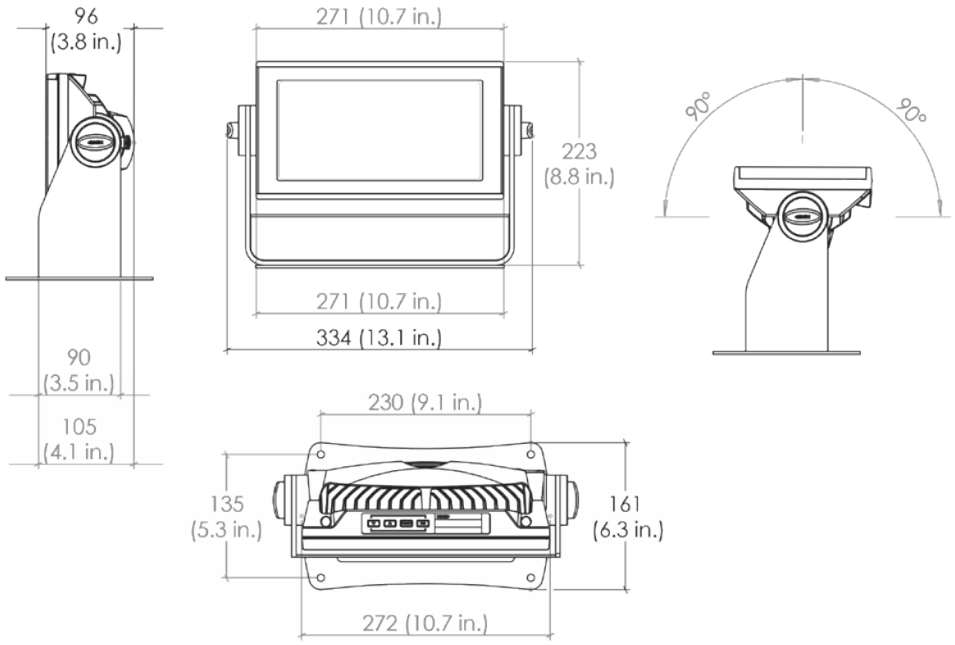

Connection diagram

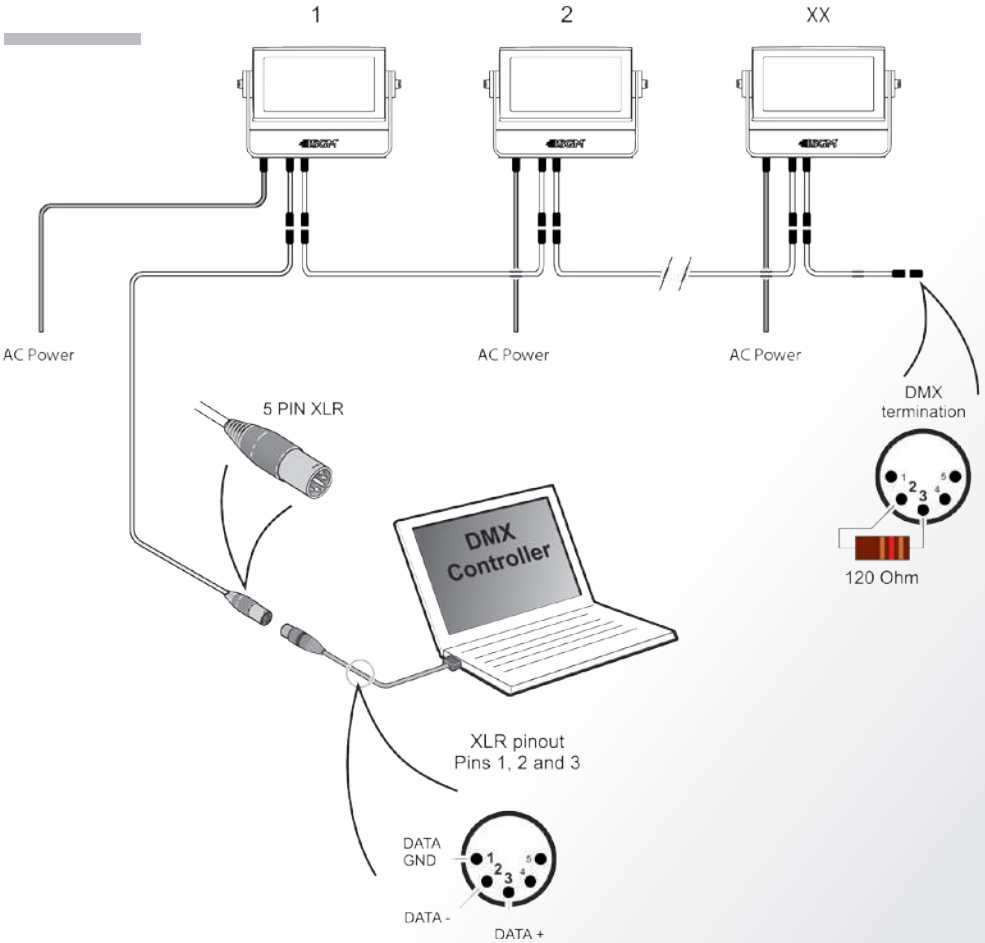

i•2 Series
Specifications

Optics	Light source	69 LEDs in total RGBW: red 18 pcs., green 18 pcs., blue 9 pcs., white 24 pcs. (5,700K) RED, GREEN, BLUE, WHITE: 69 pcs. (5,700K)
	LEDs expected lifetime	50,000 hours*
	Lens option	8.5°
	Diffusion filters (optional)	18°, 40°, 60°x10° (elliptical)
	Honeycomb (optional)	Internal
Photometrics	Light output RGBW (all LEDs on)*	8,100 lm (RED: 1,400*, GREEN: 2,400*, BLUE: 300*, WHITE: 5,200*)
	Efficacy	RGBW: 40.5 lm/W. WHITE: 72.5 lm/W, RED: 23.5 lm/W, GREEN: 41.5 lm/W
	Light output White	14,500 lumen*
	Color temperature White	5,700 K
	Light output Red	4,700 lumen*
	Light output Green	8,300 lumen*
Features	Tilt	0 - 190°
Electrical	AC power nominal	100 - 277V 50/60Hz
	AC power max rating	90 - 305V 50/60Hz
	Max. inrush current @ 240VAC	75A
	Maximum power consumption	275 W (all LEDs on)
	Typical power consumption	200 W (all LEDs on)
	Power factor	0.98 PF (230 V)
Programming and control	Protocol	USITT DMX512 A
	Setting and addressing	RDM OLED graphical display / 4 buttons Software upgradable via uploader cable (P/N:83062011)
	Standalone mode	Quick color Up to 24 programmable scenes
	DMX channels	RGBW: 3, 4, 6, 8. WHITE, RED, GREEN, BLUE: 1, 2
Physical	Dimensions (L x H x W)	334 x 223 x 105 mm (13,2 x 8,8 x 4.1 in)
	Weight	6.1 kg (13.4 lbs.)
	Material	Aluminium
	Lens	PE and tempered glass front
	IP class	IP65
	Color options	Black – RAL 9004, White – RAL 9010, Custom color – any RAL
Installation	Mounting points	Two quarter-turn locking points for one Omega bracket
	Orientation	Any
	Rigging possibilities	Floor stand (included) or hanging (Omega bracket included)
	Safety features	Bottom mount for safety wire Min. dist. to combustible materials/illuminated surfaces: 0.3 m (11 in.)
Thermal	Temperature range, Operating	–40° to +50°C (-40° to +122°F)
	Temperature range, Start-up	–20° to +50°C (-4° to +122°F)
	Temperature range, Storage	–40° to +80°C (-40° to +176°F)
	Humidity (max.)	98%
	Cooling	Active, forced air, temperature-regulated, low noise
Connections	DMX data in/out	IP65 Neutrik HD locking XLR 5-pin cable 0.5 m, for DMX in and out
	Power	Power cable 1 m with bare ends
Conforms to	2014/35/EU: Low Voltage Directive	EN 60598-1, EN 60598-2-17, EN 62471, EN 60529
	2014/30/EU: EMC Directive	EN 55103-1, EN 55103-2, EN 55015, EN 61547, EN 61000-3-2, EN 61000-3-3
	RoHS2 Directive	2011/65/EU
Included items	Included items	Floor stand (incl. screws) 1 Omega bracket User manual
Fixtures and accessories	Fixtures	Order no: 80031100 - i-2 RGBW Wash, 8.5deg, Std, Black** Order no: 80031102 - i-2 RED Wash, 8.5deg, Std, Black** Order no: 80031103 - i-2 GREEN Wash, 8.5deg, Std, Black** Order no: 80031104 - i-2 BLUE Wash, 8.5deg, Std, Black** Order no: 80031105 - i-2 WHITE Wash, 8.5deg, Std, Black**
	Cables	Order no: 83062011 - SGM USB uploader cable
	Bracket	Order no: 83060602 - Omega bracket
	Barndoor	Order no: 83061127 - Accessory holder i-2/P-2 series Order no: 83061129 - Barndoor 4-way, i-2/P-2/Q-2 series Order no: 83061130 - Barndoor 8-way, i-2/P-2/Q-2 series Order no: 83061131 - Color frame, i-2/P-2/Q-2 series
	Flightcase	Order no: 82051503 - Flightcase for 4 pcs. of i-2/P-2/Q-2 incl. barndoors

**Photometrics / SGM IlluminationLab*

Figures provided by manufacturer and obtained under manufacturer's test conditions

***Housings are also available in white or a custommade RAL color*

WASH, BLIND
STROBE LIGHT

IP65 RoHS CE

The i·5 Series

Extreme brightness – even at long distances

The i-5 is a low-profile and compact LED wash light, designed for multiple applications including touring, broadcast and architectural installations.

With its 203 high-power LEDs, it is a powerful and adjustable multi-purpose fixture with a narrow beam angle of 8.5°.

The i-5's high output, small footprint and IP65-rating make it ideal for outdoor use. Equally, the high output combined with the narrow beam angle make the i-5 suitable for lighting up buildings, structures and facades – even at long distances.

The i-5 comes in five variants: RGBW, RED, GREEN, BLUE and WHITE.

Features

- Available in 5 variants
- Narrow 8.5° beam for extreme long-throw applications
- 203 high-power LEDs
- User-friendly setup via simple control buttons and OLED display
- High output, low consumption
- Small footprint
- Suitable for multiple applications
- IP65-rated
- Practically maintenance-free
- Lightweight and aesthetic Danish design

High applicability

- Monuments and attractions
- Architectural buildings
- Shopping centers and retail
- Bridges
- Piers
- Indoor/outdoor concerts
- TV shows
- Staging
- Rental

Beam angles

Standard: 8.5°

Diffusion filters (optional): 18°, 40°, 60° x 10° (elliptical)

LUX diagram White

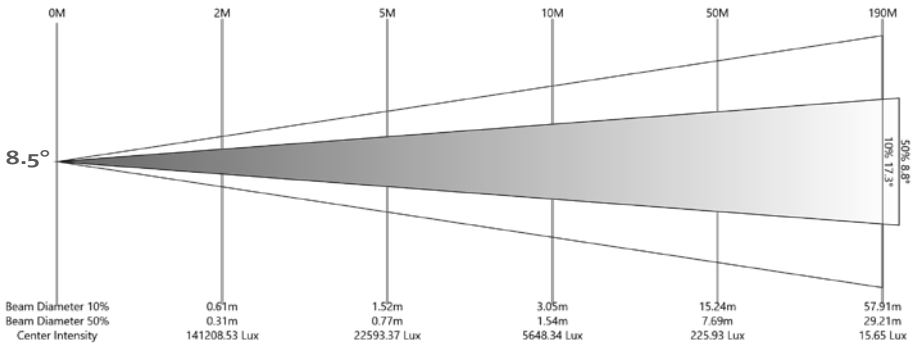

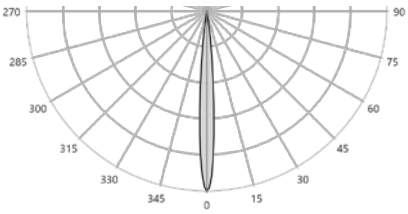

Dimensions

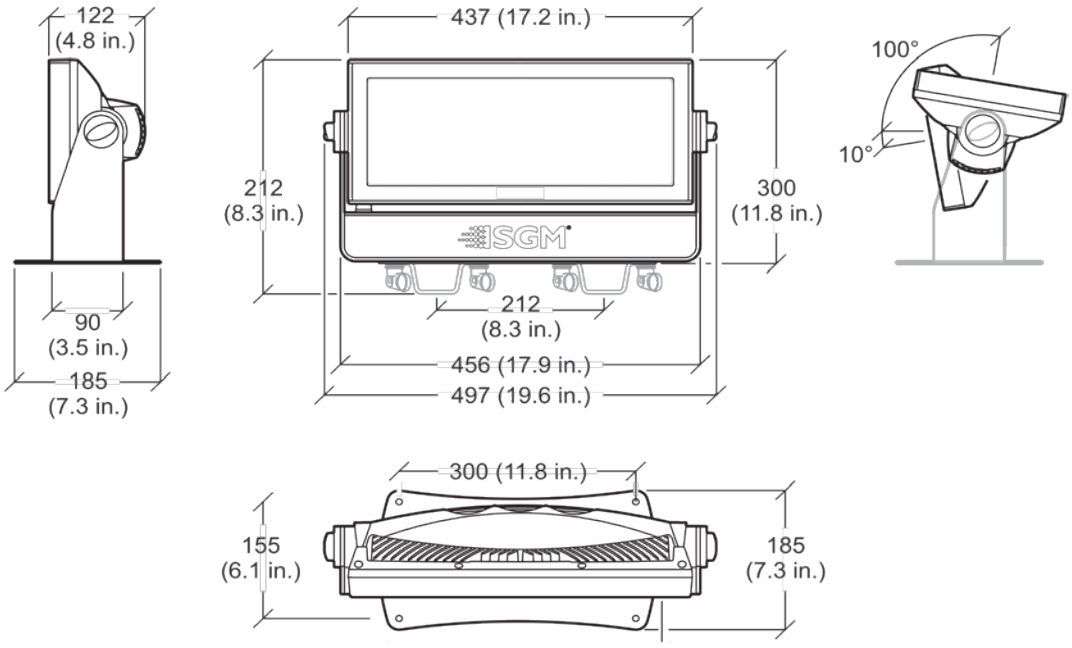

Connection diagram

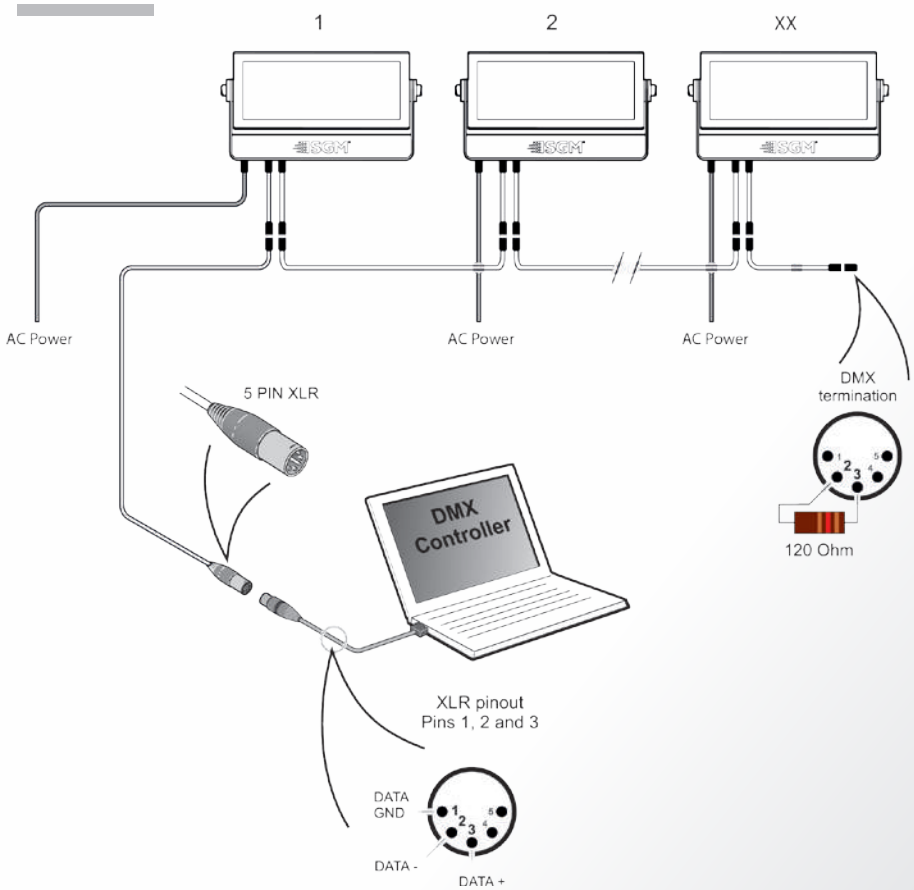

i•5 Series
Specifications

Optics	Light source	203 LEDs in total
		RGBW: red 48 pcs., green 51 pcs., blue 48 pcs., white 56 pcs. (5,700K)
		RED, GREEN, BLUE, WHITE: 203 pcs. (5,700K)
	LEDs expected lifetime	50,000 hours*
	Lens option	8.5°
	Diffusion filters (optional)	18°, 40°, 60°x10° (elliptical)
	Honeycomb (optional)	Internal
Photometrics	Light output RGBW (all LEDs on)*	19,800 lm (RED: 3,600*, GREEN: 6,000*, BLUE: 1,100*, WHITE: 8,400)
	Light output White	35,100 lm*
	Efficacy	RGBW: 47 lm/W. WHITE: 83.6 lm/W
Features	Tilt	0 - 190°
Electrical	AC power nominal	208 - 240 V nominal 50/60 Hz
	AC power max rating	190 - 264V 50/60Hz
	Maximum inrush current @ 240VAC	20A
	Maximum power consumption	450 W (all LEDs on)
	Typical power consumption	420 W (all LEDs on)
	Power factor	0.98 PF (230 V)
Programming and control	Protocol	USITT DMX512 A
		Wireless DMX (LumenRadio)
	Setting and addressing	RDM, RFID, OLED graphical display / 4 buttons
		Software upgradable with SGM USB uploader cable (P/N:83062011)
	Standalone mode	Quick color
		Up to 24 programmable scenes
		Standalone mode programmable by RFID
	DMX channels	RGBW: 3, 4, 6, 8, 9, 10. WHITE, RED, GREEN, BLUE: 1, 2
Physical	Dimensions (L x H x W)	497 x 268 x 122 mm (19.6 x 10.6 x 4.8 in)
	Weight	8.9 kg (19.6 lbs.)
	Material	Aluminium
	Lens	PE and tempered glass front
	IP class	IP65
	Color options	Black – RAL 9004, White – RAL 9010, Custom color – any RAL
Installation	Mounting points	Two times two quarter-turn locking points for one or two Omega brackets
	Orientation	Any
	Rigging possibilities	Floor stand (included) or hanging (Omega bracket included)
	Safety features	Bottom mount for safety wire
		Min.dist. to combustible materials/illuminated surfaces: 0.3 m (11 in.)
Thermal	Temperature range, Operating	–40° to +50°C (-40° to +122°F)
	Temperature range, Start-up	–20° to +50°C (-4° to +122°F)
	Temperature range, Sorage	–40° to +80°C (-40° to +176°F)
	Humidity (max.)	98%
	Cooling	Active, forced air, temperature-regulated, low noise
Connections	DMX data in/out	IP65 Neutrik HD locking XLR 5-pin cable 0.5m, for DMX in and out
	Power	Power cable 1m with bare ends
Conforms to	2014/35/EU: Low Voltage Directive	EN 60598-1, EN 60598-2-17, EN 62471, EN 60529
	2014/30/EU: EMC Directive	EN 55103-1, EN 55103-2, EN 55015, EN 61547, EN 61000-3-2, EN 61000-3-3
	RoHS2 Directive	2011/65/EU
Included items	Included items	Floor stand (incl. screws)
		2 pcs. Omega bracket
		Wireless DMX G4 antenna
		User manual
Fixtures and accessories	Fixtures	Order no: 80031300 - i-5 RGBW Wash, 8.5deg, Std, Black**
		Order no: 80031302 - i-5 RED Wash, 8.5deg, Std, Black**
		Order no: 80031303 - i-5 GREEN Wash, 8.5deg, Std, Black**
		Order no: 80031304 - i-5 BLUE Wash, 8.5deg, Std, Black**
		Order no: 80031305 - i-5 WHITE Wash, 8.5deg, Std, Black**
	Cables	Order no: 83062011 - SGM USB uploader cable
	Bracket	Order no: 83060602 - Omega bracket
		Order no: 83060603 - BCC-2 Dual bracket
		Order no: 83060604 - BCC-4 Quad bracket
		Order no: 83060610 - Floorstand for P, Q and X series with 1/4-turn fasteners
	Barndoor	Order no: 83061119 - Accessory holder i-5/P-5
		Order no: 83061120 - Barndoor 4-way, i-5/P-5/X-5/Q-7
		Order no: 83061121 - Barndoor 8-way, i-5/P-5/X-5/Q-7
		Order no: 83061122 - Color frame, i-5/P-5/X-5/Q-7
	Flightcase	Order no: 82051501 - Flightcase for 4 pcs. of i-5/P-5/Q-7/X-5
		Order no: 82051502 - Flightcase for 4 pcs. of i-5/P-5/Q-7/X-5 incl. barndoors

**Photometrics / SGM Illumination Lab*

***Housings are also available in white or a custommade RAL color*

Figures provided by manufacturer and obtained under manufacturer's test conditions

NO STRINGS
ATTACHED

IP65 RoHS

The P·1

The brightest battery-driven LED wash light

The P-1 is an IP65-rated battery-driven RGBW LED wash/blind/strobe light with a small footprint and high output, designed for multiple applications, including applications where wireless operation is essential.

This portable, lightweight fixture eliminates the hassle of cabling and ensures a quick and easy setup.

For a small fixture the P-1 is extremely versatile. Its standard 10° beam angle and round beam can be manipulated in various ways. Shape the beam and achieve different beam angles with an optional set of three magnetic holographic filter frames (19°, 45°, 63°/12° elliptical plus an empty color frame).

The P-1 runs for up to 12 hours in standard operation mode, but can easily be configured to provide an even output over longer periods of time. It offers smooth dimming and color mixing as well as wireless control and configuration. The battery status can be monitored remotely via RDM or via the built-in display.

The P-1 also contains SGM's patented dehumidification processor for a practically maintenance-free operation.

Features

- IP65-rated RGBW LED wash
- Battery-driven
- Wireless control and configuration
- 8 x 12.5 W RGBW LEDs
- User-friendly setup via simple control-buttons and OLED display
- Ultra lightweight
- Practically maintenance-free
- Anti-theft protection (optional)
- Kenington lock compatible
- Magnetic click-on filters and barndoors
- Lightweight and aesthetic Danish design

High applicability

- Any event where wireless is essential
- Monuments and attractions
- Architectural buildings
- Shopping centers and retail
- Bridges
- Piers
- Indoor/outdoor concerts
- TV shows
- Staging
- Rental

Beam angles

Narrow beam: 10°

Magnetic holographic filter frames: 19°, 45°, 63°/12° elliptical

LUX diagram All on

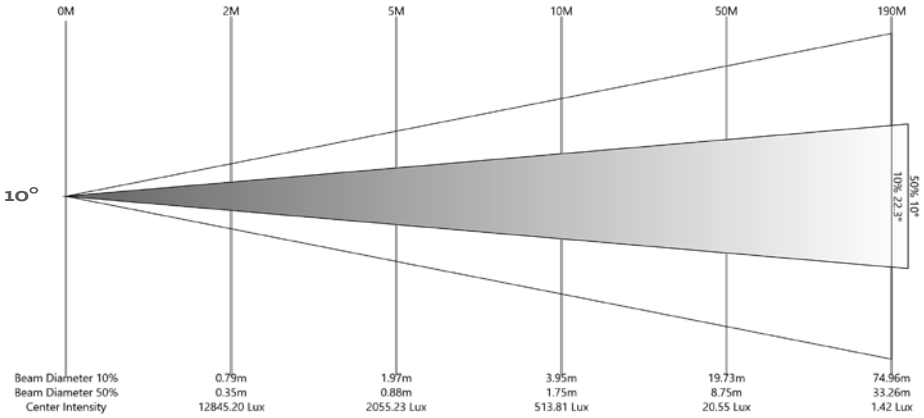

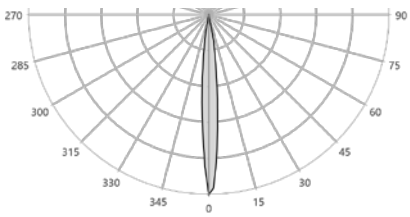

Dimensions

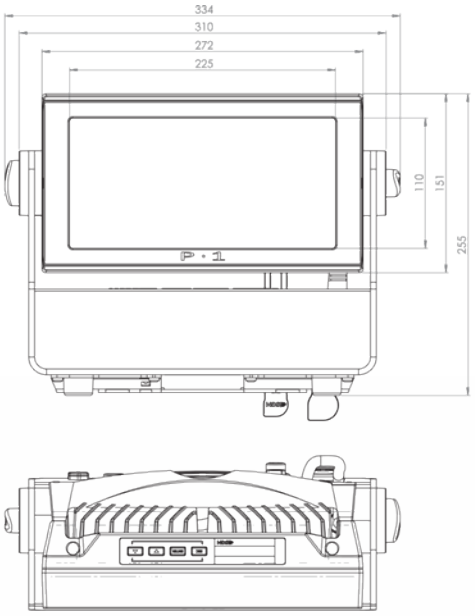

Connection diagram

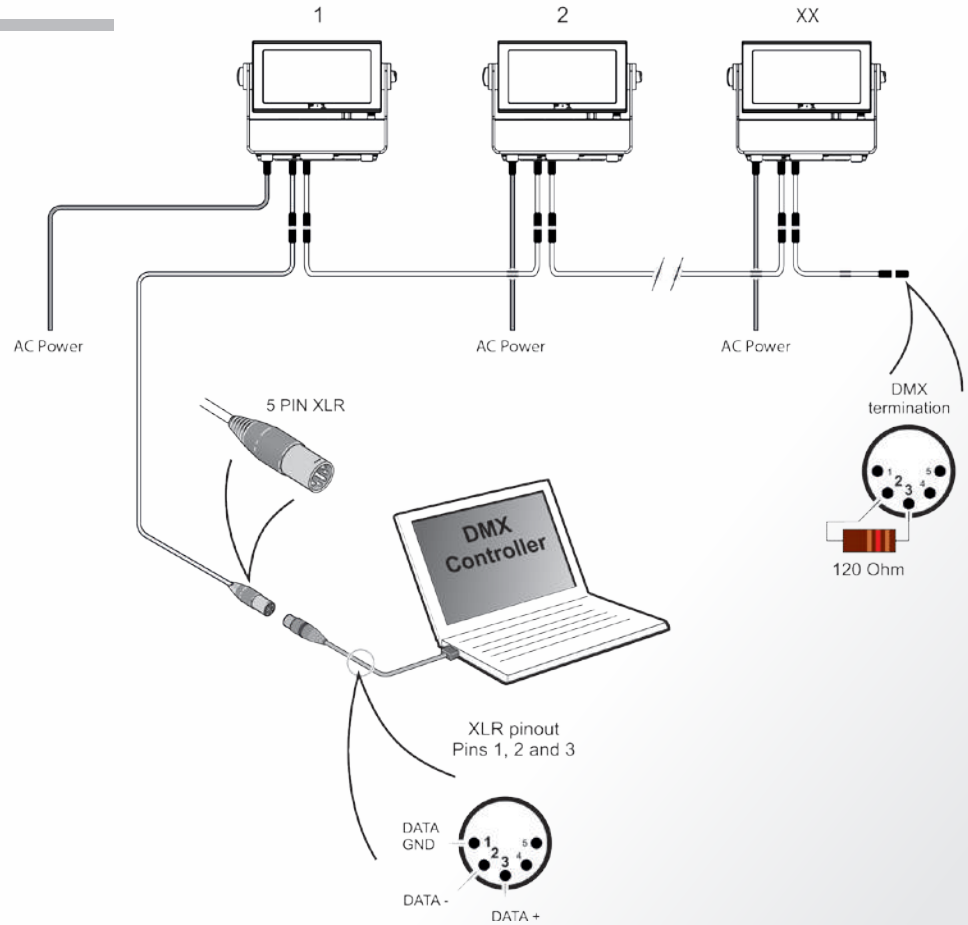

P•1
Specifications

Optics	Light source	8 x high-power 12.5W RGBW LEDs
	LEDs expected lifetime	50,000 hours*
	Beam angle	10°
Photometric	Light output	3,000 lm
	Efficacy	33 lm/W
Features	Tilt	0° - 190°
	Filters	Magnetic easy-fit spread angle filters and color frame
	LED panel	2 individually controllable segments
Electrical	AC power nominal	100 - 240V 50/60Hz
	AC power max rating	90 - 264V 50/60Hz
	Maximum inrush current @ 240VAC	60A
	Power supply unit	High-efficiency electronic switch-mode
	Maximum power consumption	90 W (all LEDs on)
	Standby power	3W
Battery	Battery type	Lithium-Ion battery
	Battery capacity	Configurable up to 24 hours
	Battery charge time up to 75% capacity	3,5 hours
	Battery charge time up to 100% capacity	6,5 hours
	Battery cycles	>1000
Programming and Control	Protocol	USITT DMX512 A
		CRMX, W-DMX™ G2, W-DMX™ G3, W-DMX™ G4, W-DMX™ G4S
	Setting and addressing	RDM ANSI E1.20
		Stand alone mode
		Oled graphical display / 4 buttons
		Software upgradable via Uploader cable (P/N:83062011)
	DMX channels	3, 4, 6, 9, 11, 16
Physical	Dimensions (L x H x W)	334 x 254.6 x 119 mm (13.2 x 10.1 x 4.7 in)
	Weight	5.7 kg (12.9 lbs.)
	Material	Aluminium, steel, plastic PC/ASA, rubber
	Lens	Tempered glass front
	IP class	IP65
Installation	Orientation	Any
	Rigging possibilities	Hanging (Omega bracket included) or ceiling/wall mount (optional)
	Safety features	Bottom mount for safety wire
		Minimum distance to combustible materials: 0.3m (11.8 in.)
		Recommended minimum distance to illuminated surfaces: 1 m (40 in.)
	Anti-theft protection	Kensington Lock
		Anti-theft protection with movement sensor (optional)
Thermal	Temperature range, Operation AC power	0°C – 45°C (32° - 113°F)
	Temperature range, Operation Battery power	-20°C – 50°C (4° - 122°F)
	Temperature range, Charging	0°C – 45°C (32° - 113°F)
	Temperature range, Start-up AC power	0°C – 45°C (32° - 113°F)
	Temperature range, Start-up Battery power	-20°C – 50°C (4° - 122°F)
	Temperature range, Storage	-20°C – 50°C (4° - 122°F)
	Humidity (max.)	98%
	Cooling	Passive
Connections	AC power input	Neutrik TRUE1 power input connector
	DMX data in/out	IP65 Switchcraft XLR 5-pin
Conforms to	2014/35/EU: Low Voltage Directive	EN 60598-1, EN 60598-2-17, EN 62471, EN 60529
	2014/30/EU: EMC Directive	EN 55103-1, EN 55103-2, EN 55015, EN 61547, EN 61000-3-2, EN 61000-3-3
	RoHS2 Directive	2011/65/EU
Included items	Included items	1 Omega bracket
		2m power cable with Neutrik TRUE1
		User manual
Fixtures and accessories	Fixtures	Order no: 80031501 - P-1 Wash, 10deg, Std, BL (incl. 3 pcs. batt.)
		Order no: 80031511 - P-1 Wash, 10deg, Std, WH (incl. 3 pcs. batt.)
		Order no: 80031521 - P-1 Wash, 10deg, Std, CU (incl. 3 pcs. batt.)
	Battery	Order no: 83061709 - Battery, nominal: 21,6V - nominal: 3,350 mAh (1 pcs.)
		Order no: 83061710 - Battery, nominal: 21,6V - nominal: 3,350 mAh (2 pcs.)
	Wireless transmitter	Order no: 80070229 - LumenRadio CRMX transmitter (DMX only)
	Cables	Order no: 83062011 - SGM USB uploader cable
		Order no: 07860040 - 2 m power cable with Neutrik TRUE1
	Filters and frames	Order no: 83061140 - Magnetic filter frame - Medium angle (19°)
		Order no: 83061141 - Magnetic filter frame - Wide angle (45°)
		Order no: 83061142 - Magnetic filter frame – Elliptical horizontal (63°x12°)
		Order no: 83061147 - Magnetic filter frame – Elliptical vertical (12°x63°)
		Order no: 83061144 - Magnetic filter frame for optional filters
	Bracket	Order no: 83060614 - Ceiling/wall mount P-1
		Order no: 83060602 - Omega bracket
	Barndoor	Order no: 83061138 - Barndoor 4-way, P-1
		Order no: 83061139 - Barndoor 8-way, P-1
	Flightcase	Order no: 82051009 - Flightcase for 4 pcs. P-1 with accessories
	Flightcase	Order no: 82051010 - Flightcase for 4 pcs. P-1 with accessories (incl. charger)

**Figures provided by manufacturer and obtained under manufacturer's test conditions*

***Goniometer Scan / SGM Illumination Lab 1.6.0.0*

BL = Black (RAL 9004)

WH = White (RAL 9010)

CU = Custom Color (Any RAL color)

COMPACT
SIZE

IP65 RoHS CE

The P·2

Lightweight RGBW fixture with maximum output

This compact and lightweight fixture has an array of features to suit any need.

Based on the groundbreaking P-5 technology, the IP65-rated P-2 comes in a very small and robust chassis weighing only 6.1 kilos/13.4 lbs.

Taking it a step further, the 18 lenses are divided into three individually controllable segments with RGBW colors, so implementing the P-2 in your lighting design generates wide-ranging color and effect combinations.

With its 18 high-power 10 W RGBW LEDs, the P-2 has a staggering light output of 6,300 lumen. This extremely compact and lightweight unit ensures a quick and easy setup.

The P-2 offers a variation of beam angles with 15°, 21° and 43° interchangeable lenses.

Features

- Cutting-edge, high-performance LED product
- Interchangeable lens kits of 15°, 21° and 43°
- 18 high-power 10 W LEDs
- User-friendly setup via simple control-buttons and OLED display
- Numerous mounting options and simple positioning
- Lightweight and aesthetic Danish design
- High output, low consumption
- Small footprint
- Suitable for multiple applications
- IP65-rated
- Practically maintenance-free

High applicability

- Monuments and attractions
- Architectural buildings
- Shopping centers and retail
- Bridges
- Piers
- Indoor/outdoor concerts
- TV shows
- Staging
- Rental

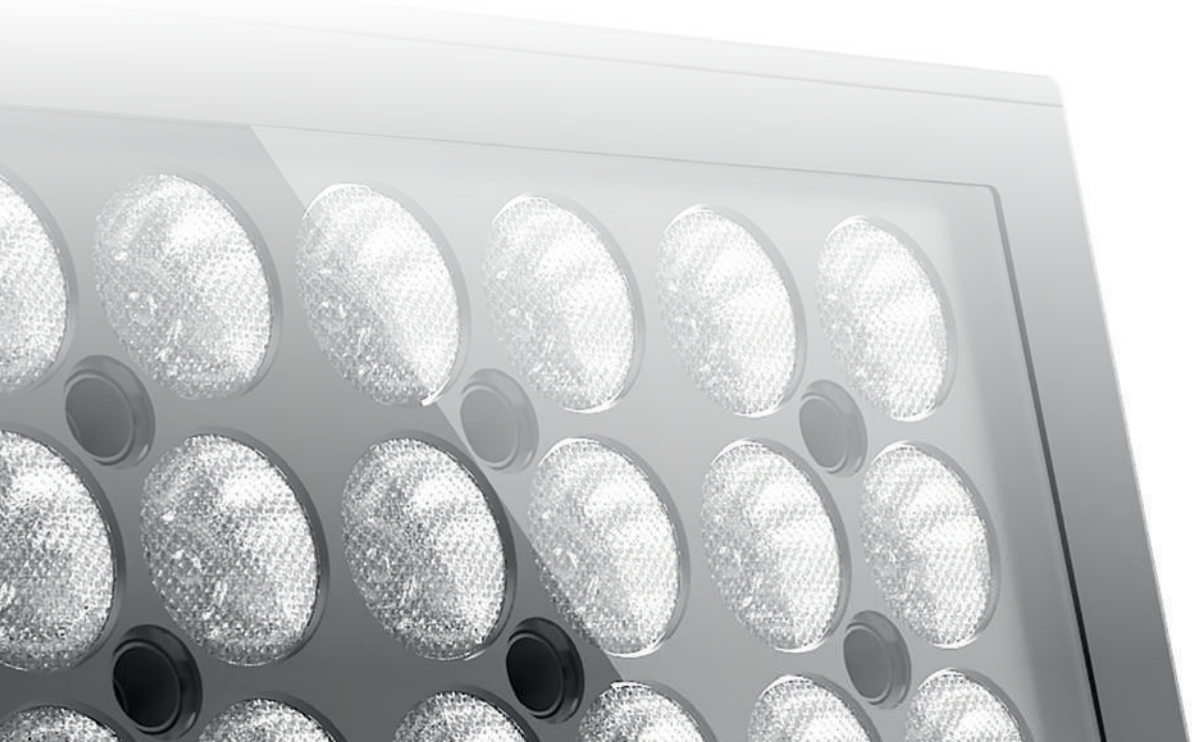

Dimensions

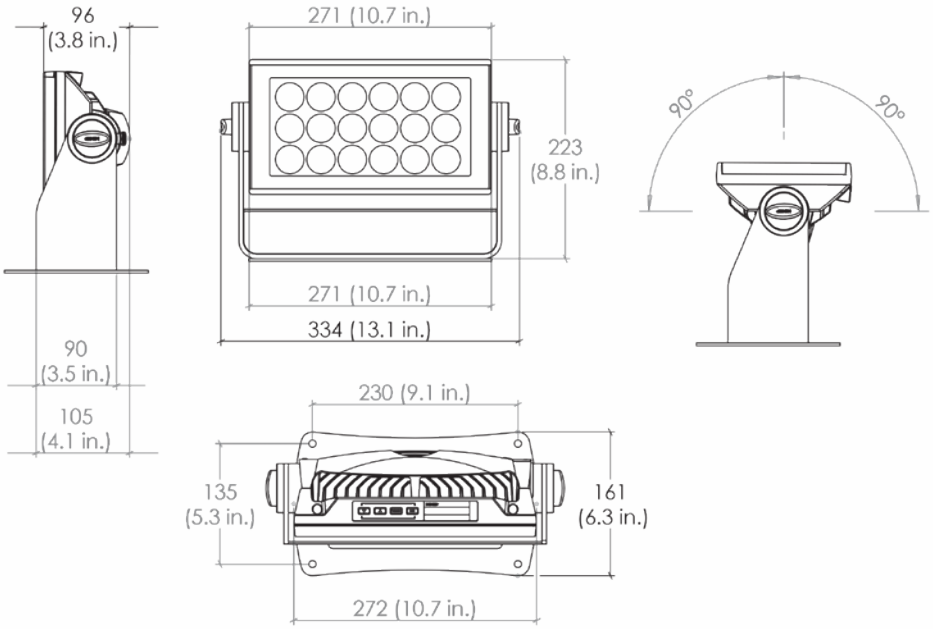

Connection diagram

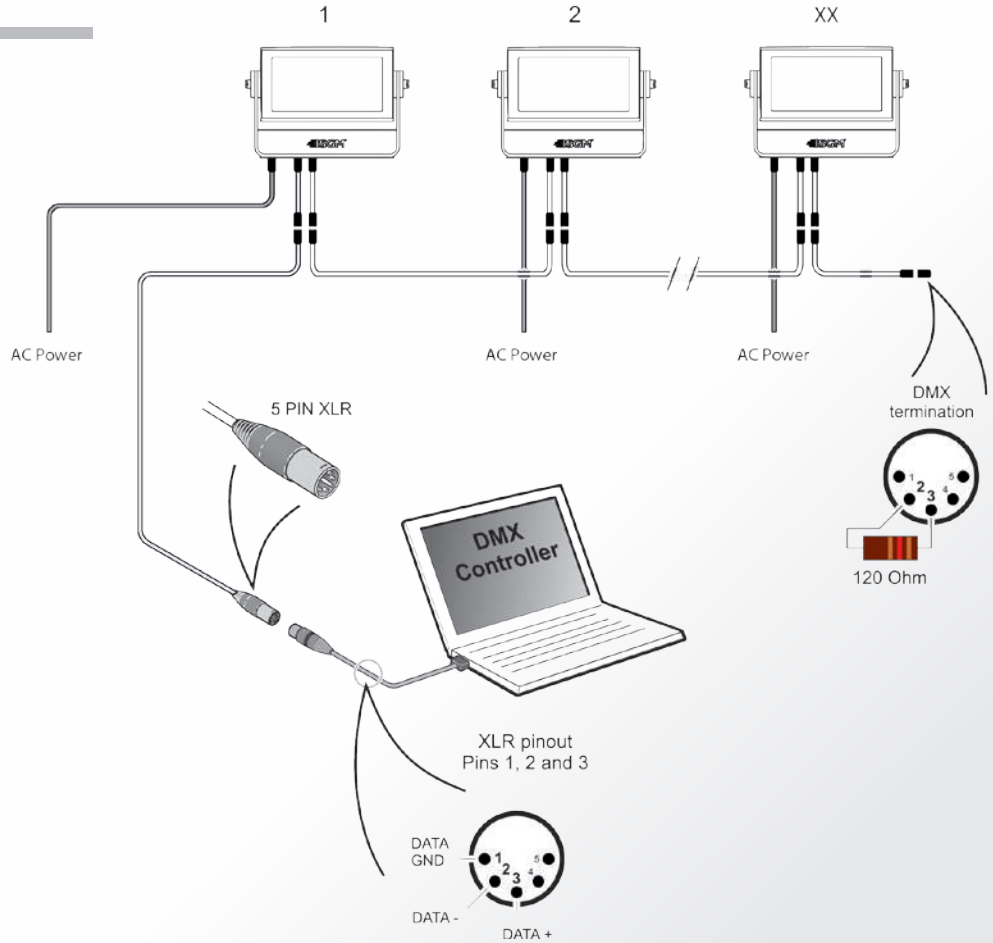

Beam angles

Narrow: 15°

Medium: 21°

Wide: 43°

LUX diagram All on

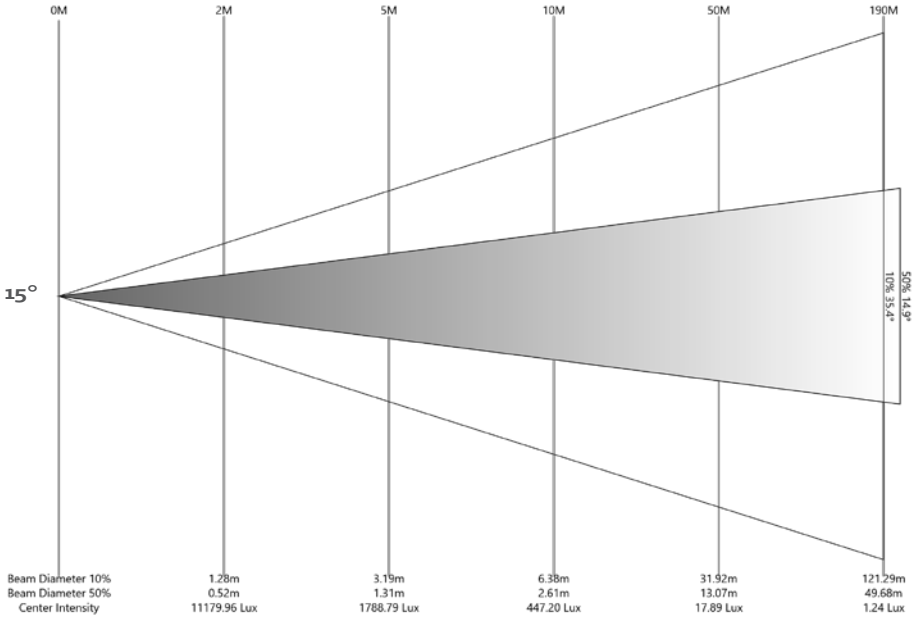

Beam Diameter 10%	1.28m	3.19m	6.38m	31.92m	121.29m
Beam Diameter 50%	0.52m	1.31m	2.61m	13.07m	49.68m
Center Intensity	11179.96 Lux	1788.79 Lux	447.20 Lux	17.89 Lux	1.24 Lux

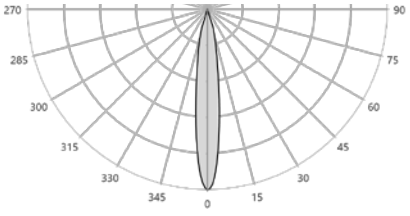

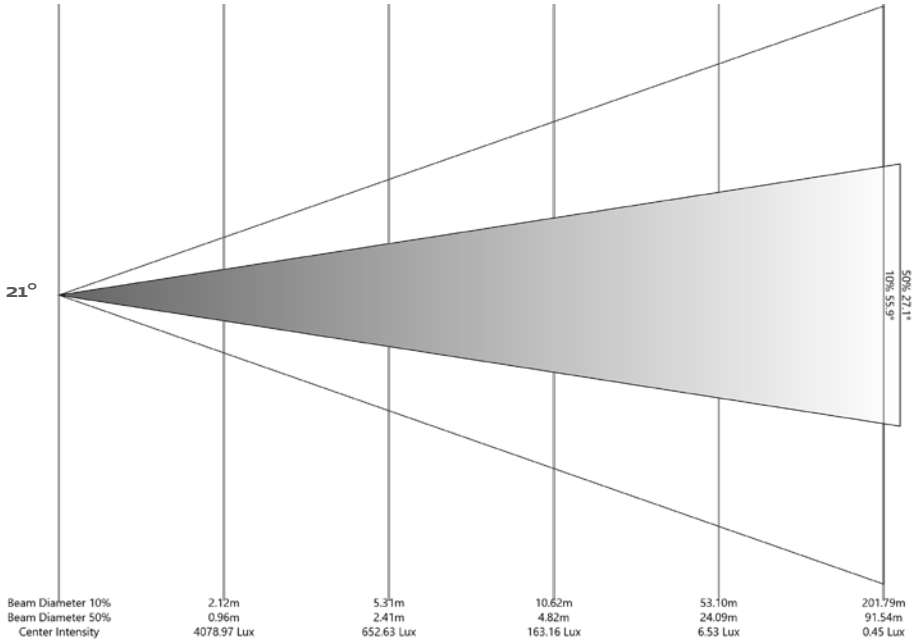

Beam Diameter 10%	2.12m	5.31m	10.62m	53.10m	201.79m
Beam Diameter 50%	0.96m	2.41m	4.82m	24.09m	91.54m
Center Intensity	4078.97 Lux	652.63 Lux	163.16 Lux	6.53 Lux	0.45 Lux

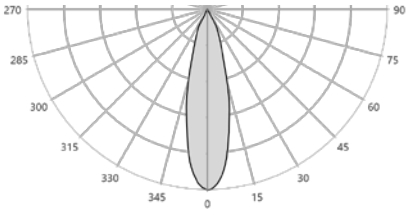

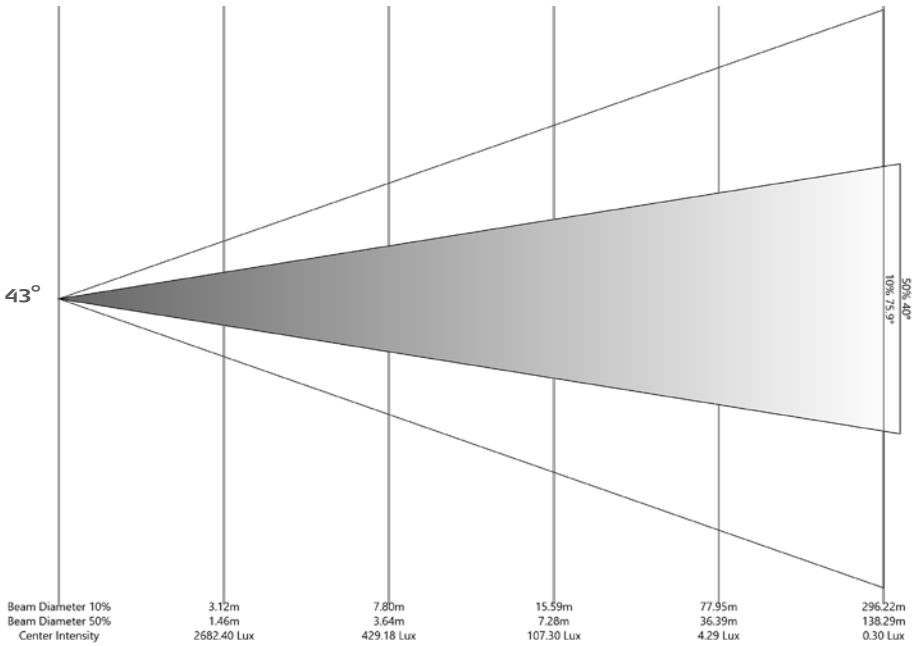

Beam Diameter 10%	3.12m	7.80m	15.59m	77.95m	296.22m
Beam Diameter 50%	1.46m	3.64m	7.28m	36.39m	138.29m
Center Intensity	2682.40 Lux	429.18 Lux	107.30 Lux	4.29 Lux	0.30 Lux

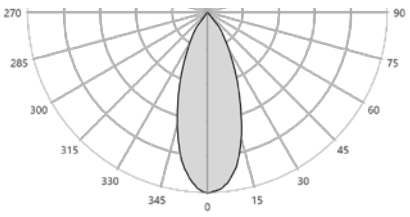

P•2
Specifications

Optics	Light source	18 x high-power 10W RGBW LEDs
	LEDs expected lifetime	50,000 hours*
	Interchangable lens option	15°, 21° & 43°
Photometric	Light output	6,300 lm** (43° lens)
	Efficacy	31,5 lm/W
Features	Pan / tilt	0° / 190°
	LED panel	3 individually controllable segments
Electrical	AC power nominal	100 - 277V 50/60Hz
	AC power max rating	90 - 305V 50/60Hz
	Maximum inrush current @ 240VAC	75A
	Maximum power consumption	275 W (all LEDs on)
	Typical power consumption	200 W (all LEDs on)
	Power factor	0.98 PF (230 V)
Programming and control	Protocol	USITT DMX512 A
	Setting and addressing	RDM
		OLED graphical display / 4 buttons
		Software upgradable with SGM USB uploader cable (P/N:83062011)
	Standalone mode	Quick color
		Up to 24 programmable scenes
	DMX channels	3, 6, 9, 12, 15 or 22
Physical	Dimensions (L x H x W)	334 x 223 x 105 mm (13,2 x 8,8 x 4.1 in)
	Weight	6.1 kg (13.4 lbs.)
	Material	Aluminium
	Lens	PE and tempered glass front
	IP class	IP65
	Color options	White – RAL 9010
		Black – RAL 9004
		Custom color – any RAL
Installation	Mounting points	Two quarter-turn locking points for one Omega bracket
	Orientation	Any
	Rigging possibilities	Floor stand (included) or hanging (Omega clamp included)
	Safety features	Bottom mount for safety wire
		Minimum distance to combustible materials: 0.3 m (11 in.)
		Minimum distance to illuminated surfaces: 0.3 m (11 in.)
Thermal	Temperature range, Operating	–40° to +50°C (-40° to +122°F)
	Temperature range, Start-up	–20° to +50°C (-4° to +122°F)
	Temperature range, Storage	–40° to +80°C (-40° to +176°F)
	Humidity (max.)	98%
	Cooling	Active, forced air, temperature-regulated, low noise
Connections	DMX data in/out	IP65 Neutrik HD locking XLR 5-pin cable 0.5m, for DMX in and out
	Power	Power cable 1m with bare ends
Certified to	CSA E60598-1:02, Ed: 2	
	CSA-E598-2-17-98, Ed: 1	
Conforms to	UL Std. 1573	
	2014/35/EU: Low Voltage Directive	EN 60598-1, EN 60598-2-17, EN 62471, EN 60529
	2014/30/EU: EMC Directive	EN 55103-1, EN 55103-2, EN 55015, EN 61547, EN 61000-3-2, EN 61000-3-3
	RoHS2 Directive	2011/65/EU
Included items	Included items	Floor stand (incl. screws)
		1 pcs Omega bracket
		User manual
Fixtures and accessories	Fixtures	Order no: 80030528 - P-2 Wash, 43deg, Std, BL
		Order no: 80030543 - P-2 Wash, 43deg, Std, WH
		Order no: 80030591 - P-2 Wash, 43deg, Std, CU
		Order no: 80030526 - P-2 Wash, 21deg, Std, BL
		Order no: 80030544 - P-2 Wash, 21deg, Std, WH
		Order no: 80030592 - P-2 Wash, 21deg, Std, CU
		Order no: 80030529 - P-2 Wash, 15deg, Std, BL
		Order no: 80030545 - P-2 Wash, 15deg, Std, WH
		Order no: 80030593 - P-2 Wash, 15deg, Std, CU
	Cables	Order no: 83062011 - SGM USB uploader cable
	Lens/s	Order no: 83061134 - P-2, Lens kit (43°)
		Order no: 83061133 - P-2, Lens kit (21°)
		Order no: 83061132 - P-2, Lens kit (15°)
	Bracket	Order no: 83060602 - Omega bracket
	Barndoor	Order no: 83061127 - Accessory holder i-2/P-2 series
		Order no: 83061129 - Barndoor 4-way, i-2/P-2/Q-2 series
		Order no: 83061130 - Barndoor 8-way, i-2/P-2/Q-2 series
		Order no: 83061131 - Color frame, i-2/P-2/Q-2 series
	Flightcase	Order no: 82051503 - Flightcase for 4 pcs. of i-2/P-2/Q-2 incl. barndoors

**Figures provided by manufacturer and obtained under manufacturer's test conditions*

***Goniometer Scan / SGM Illumination Lab 1.6.0.0*

BL = Black (RAL 9004) / WH = White (RAL 9010) / CU = Custom Color (Any RAL color)

The P-5

Probably the brightest RGBW LED wash light

This lightweight fixture has an array of features to suit any need.

The P-5 has an extremely high luminous output of the LED modules with an efficacy of 46lm/W. The flicker-free operation of the P-5 makes it suitable for any application. The IP65-rated fixture will outshine its competitors both inside and outside with its stunning light output of more than 19,300 lumens.

With a weight of only 8.9 kg, the P-5 can be mounted on any surface without worrying about the use of special surface anchors.

The 44 high-power 10 W RGBW LEDs will produce a large variety of saturated colors and velvety smooth color mixing, while producing a very bright white light, providing a full palette of pastel colors as well as the most powerful and pure white light.

The flicker-free operation has been approved by camera manufacturers for TV studio lighting.

Features

- Cutting-edge, high-performance LED product
- Interchangeable lens kits of 15°, 21° and 43°
- 44 high-power 10 W LEDs
- User-friendly setup via simple control-buttons and OLED display
- Built-in wireless DMX
- Configuration via RFID from smartphone
- Numerous mounting options and simple positioning
- Lightweight and aesthetic Danish design
- High output, low consumption
- Small footprint
- Suitable for multiple applications
- IP65-rated
- Practically maintenance-free

High applicability

- Monuments and attractions
- Architectural buildings
- Shopping centers and retail
- Bridges
- Piers
- Indoor/outdoor concerts
- TV shows
- Staging
- Rental

The P-5 patents

The P-5 is covered by several patents safeguarding the uniqueness of the product.

The P-5 is protected under the PCT patent with **No. WO 2013/034968.** It also has a Registered Community Design patent valid in Europe: **No. 001914094-0001/0030.**

The P-5 is registered for **Design Patent** in the United States and China.

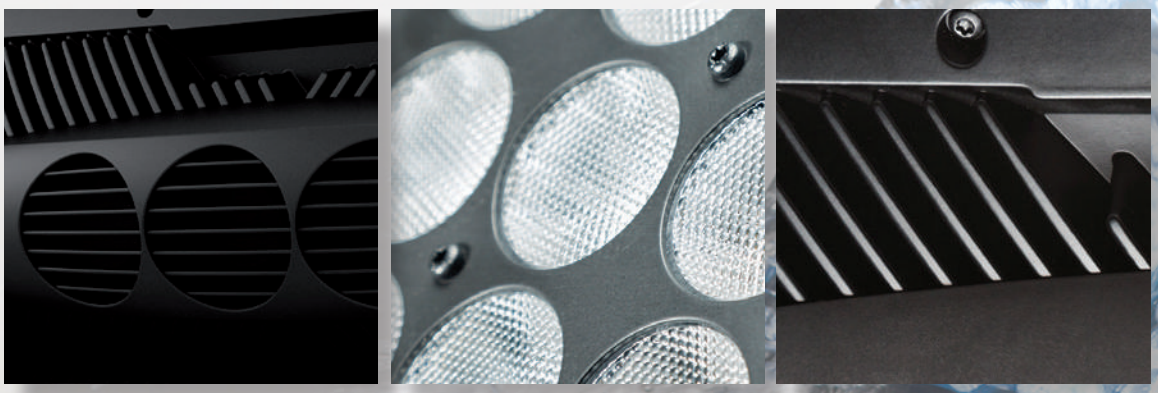

Dimensions

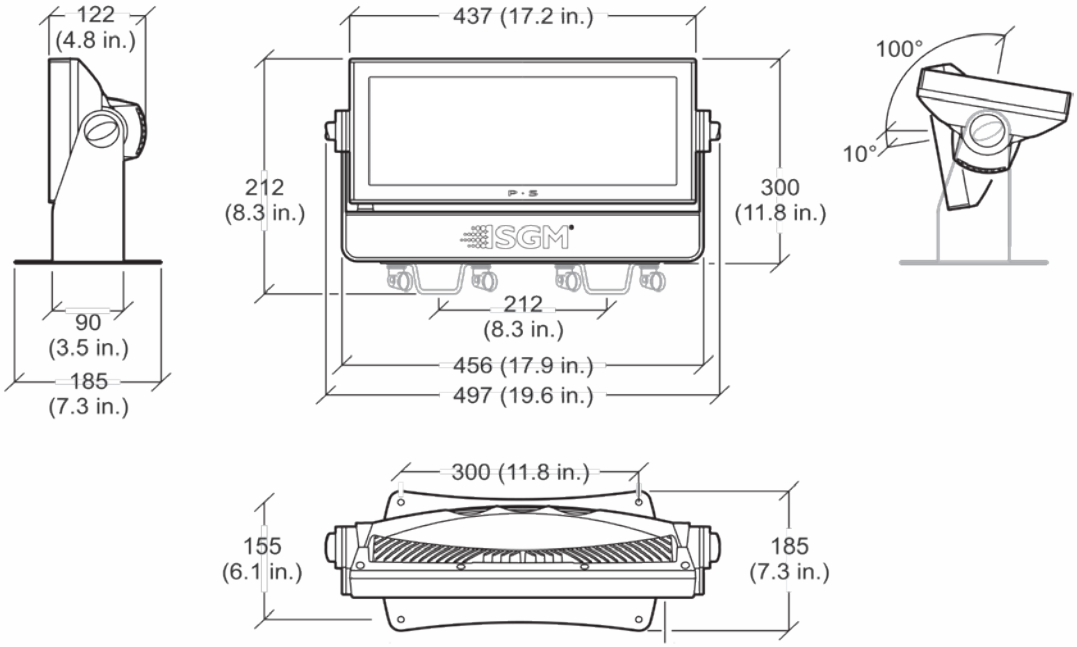

Connection diagram

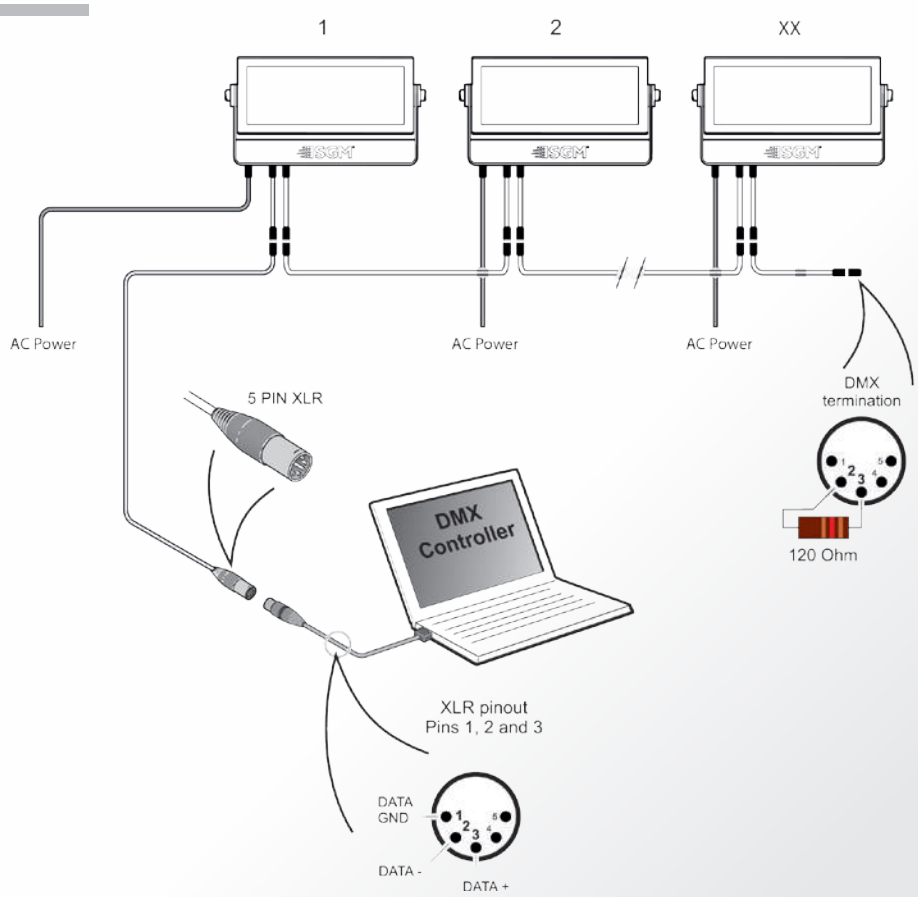

Beam angles

Narrow: 15°

Medium: 21°

Wide: 43°

LUX diagram All on

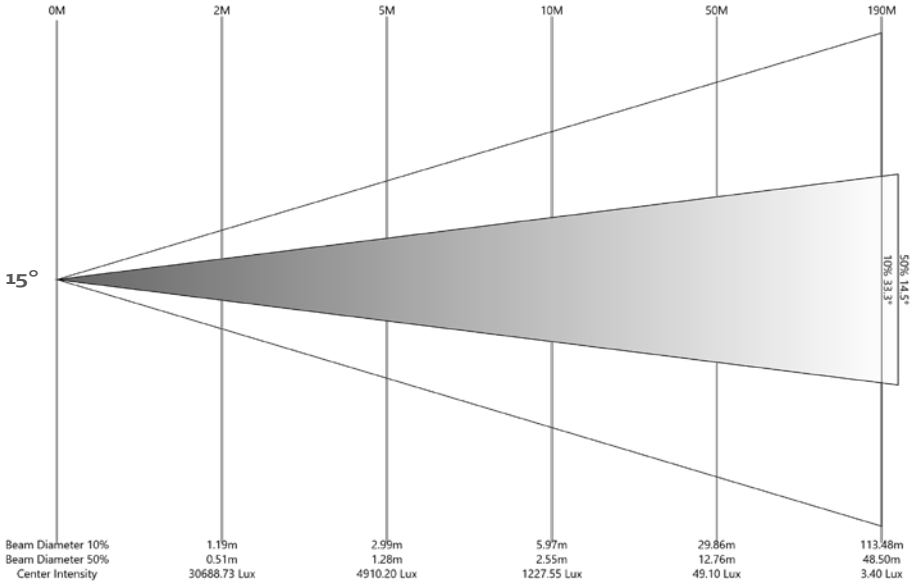

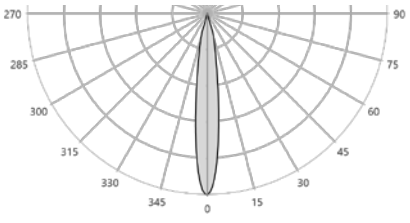

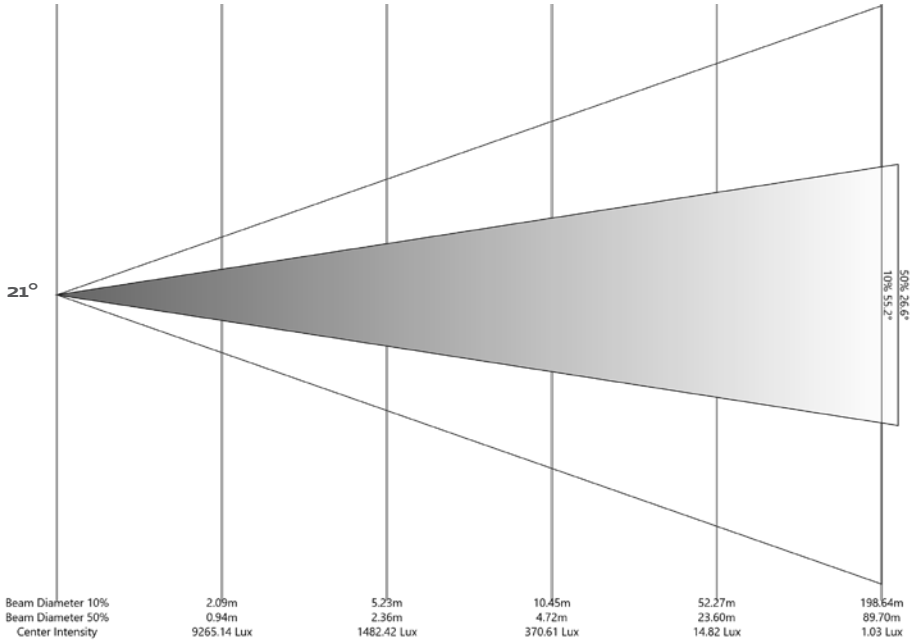

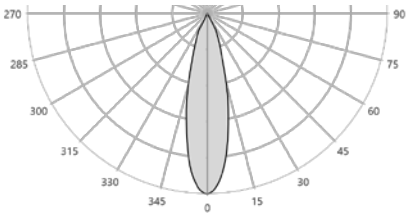

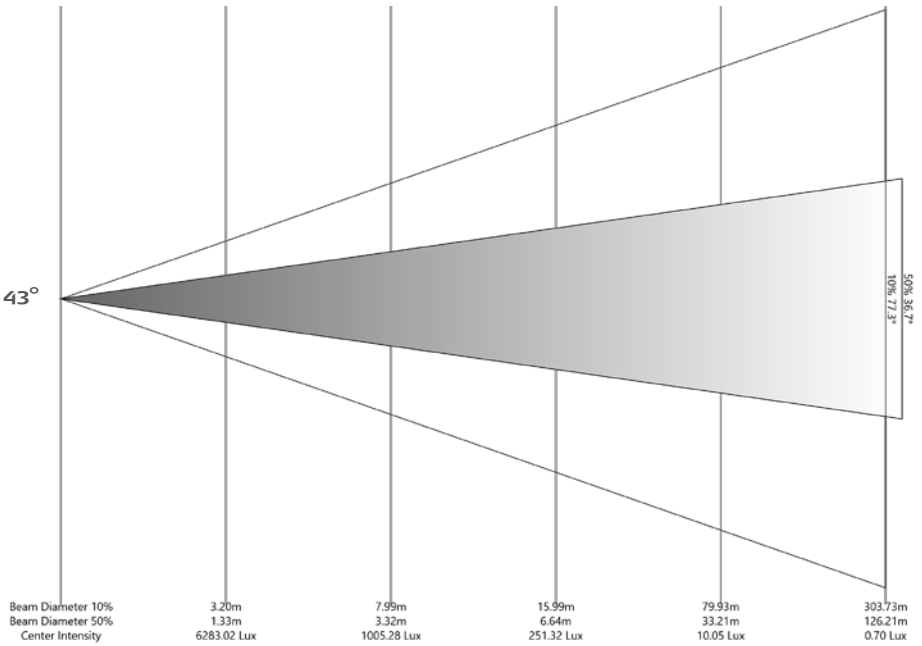

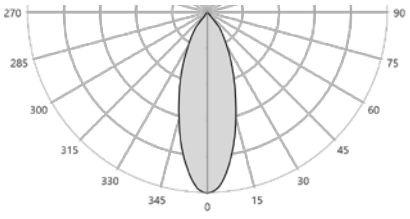

P•5
Specifications

Optics	Light source	44 x high-power 10W RGBW LEDs
	LEDs expected lifetime	50,000 hours*
	Interchangable lens option	15°, 21° & 43°
Photometric	Light output	19,300 lm** (43° lens)
	Efficacy	46 lm/W
Features	Tilt	0 - 190°
Electrical	AC power	208 - 240V nominal 50/60Hz
	Maximum inrush current @ 240VAC	20A
	Maximum power consumption	450 W (all LEDs on)
	Typical power consumption	420 W (all LEDs on)
	Power factor	0.98 PF (230 V)
Programming and control	Protocol	USITT DMX512 A
		Wireless DMX (LumenRadio)
	Setting and addressing	RDM
		RFID
		OLED graphical display / 4 buttons
		Software upgradable with SGM USB uploader cable (P/N:83062011)
	Standalone mode	Quick color
		Up to 24 programmable scenes
		Standalone mode programmable by RFID
	DMX channels	3, 4, 6, 8, 9 or 10
Physical	Dimensions (L x H x W)	497 x 268 x 122 mm (19.6 x 10.6 x 4.8 in)
	Weight	8.9 kg (19.6 lbs.)
	Material	Aluminium
	Lens	PE and tempered glass front
	IP class	IP65
	Color options	White – RAL 9010
		Black – RAL 9004
		Custom color – any RAL
Installation	Mounting points	2 x two quarter-turn locking points for one or two Omega brackets
	Orientation	Any
	Rigging possibilities	Floor stand (included) or hanging (Omega clamps included)
	Safety features	Bottom mount for safety wire
		Minimum distance to combustible materials: 0.3 m (11 in.)
		Minimum distance to illuminated surfaces: 0.3 m (11 in.)
Thermal	Temperature range, Operating	–40° to +50°C (-40° to +122°F)
	Temperature range, Start-up	–20° to +50°C (-4° to +122°F)
	Temperature range, Storage	–40° to +80°C (-40° to +176°F)
	Humidity (max.)	98%
	Cooling	Active, forced air, temperature-regulated, low noise
Connections	DMX data in/out	IP65 Neutrik HD locking XLR 5-pin cable 0.5m, for DMX in and out
	Power	Power cable 1m with bare ends
Certified to	CSA Std. C22.2 No. 166	
Conforms to	UL Std. 1573	
	2014/35/EU: Low Voltage Directive	EN 60598-1, EN 60598-2-17, EN 62471, EN 60529
	2014/30/EU: EMC Directive	EN 55103-1, EN 55103-2, EN 55015, EN 61547, EN 61000-3-2, EN 61000-3-3
	RoHS2 Directive	2011/65/EU
Included items	Included items	Floor stand (incl. screws)
		2 pcs. Omega brackets
		Wireless DMX antenna
		User manual
Fixtures and accessories	Fixtures	Order no: 80030517 - P-5 Wash, 43deg, Std, BL
		Order no: 80030537 - P-5 Wash, 43deg, Std, WH
		Order no: 80030540 - P-5 Wash, 43deg, Std, CU
		Order no: 80030515 - P-5 Wash, 21deg, Std, BL
		Order no: 80030538 - P-5 Wash, 21deg, Std, WH
		Order no: 80030541 - P-5 Wash, 21deg, Std, CU
		Order no: 80030518 - P-5 Wash, 15deg, Std, BL
		Order no: 80030539 - P-5 Wash, 15deg, Std, WH
		Order no: 80030542 - P-5 Wash, 15deg, Std, CU
	Lens/s	Order no: 83061118 - P-5, Lens kit (43°)
		Order no: 83061117 - P-5, Lens kit (21°)
		Order no: 83061116 - P-5, Lens kit (15°)
	Cables	Order no: 83062011 - SGM USB uploader cable
	Brackets	Order no: 83060603 - BCC-2 Dual bracket
		Order no: 83060604 - BCC-4 Quad bracket
		Order no: 83060602 - Omega bracket
	Floorstand	Order no: 83060610 - Floorstand for i, P, Q and X series with 1/4-turn fasteners
	Barndoor	Order no: 83061119 - Accessory holder i-5 / P-5 Series
		Order no: 83061120 - Barndoor 4-way, i-5/P-5/X-5/Q-7 series
		Order no: 83061121 - Barndoor 8-way, i-5/P-5/X-5/Q-7 series
		Order no: 83061122 - Color frame, i-5/P-5/X-5/Q-7 series
	Flightcase	Order no: 82051501 - Flightcase for 4 pcs. of i-5/P-5/Q-7/X-5
		Order no: 82051502 - Flightcase for 4 pcs. of i-5/P-5/Q-7/X-5 incl. barndoors

**Figures provided by manufacturer and obtained under manufacturer's test conditions*

***Goniometer Scan / SGM Illumination Lab 1.6.0.0*

BL = Black (RAL 9004) / WH = White (RAL 9010) / CU = Custom Color (Any RAL color)

STRIKINGLY
BRIGHT

IP65 RoHS CE

The P·5 W & P·5 TW

Spectacular and vivid lighting design

These compact and lightweight fixtures have an array of features to suit any application where white and tunable white light is essential.

Both fixtures are great for making spectacular and vivid lighting designs upon facades, structures and buildings. They are also ideal for staging and broadcast.

Both units weigh only 8.9 kg, are IP65-rated for outdoor use and run a flicker-free operation. They contain 44 high-power 10 W LEDs. The P-5 W produces a stunningly white and bright light with a powerful output of 23,700 lumens. With the P-5 TW there are vast opportunities to tune the high-quality light between 2,200 and 5,300 K with a luminous output of more than 22,300.

The P-5 W has an efficacy of 56,4 lm/W, while the P-5 TW has a an efficacy of 53 lm/W.

The flicker-free operation has been approved by camera manufacturers for TV studio lighting.

Features

- Cutting-edge, high-performance LED product
- Interchangeable lens kits of 15°, 21° and 43°
- 44 high-power 10 W LEDs
- User-friendly setup via simple control buttons and OLED display
- Built-in wireless DMX
- Numerous mounting options and simple positioning
- Configuration via RFID from smartphone
- Lightweight and aesthetic Danish design
- High output, low consumption
- Small footprint
- Suitable for multiple applications
- IP65-rated
- Practically maintenance-free

High applicability

- Monuments and attractions
- Architectural buildings
- Shopping centers and retail
- Bridges
- Piers
- Indoor/outdoor concerts
- Broadcast
- Staging
- Rental

The P-5 W & P-5 TW patents

The P-5 W and P-5 TW are covered by several patents safeguarding the uniqueness of the product.

The P-5 W and P-5 TW are protected under the PCT patent with **No. WO 2013/034968.** They also have a Registered Community Design patent valid in Europe: **No. 001914094-0001/0030.**
The P-5 W and P-5 TW are registered for **Design Patent** in the United States and China.

Dimensions

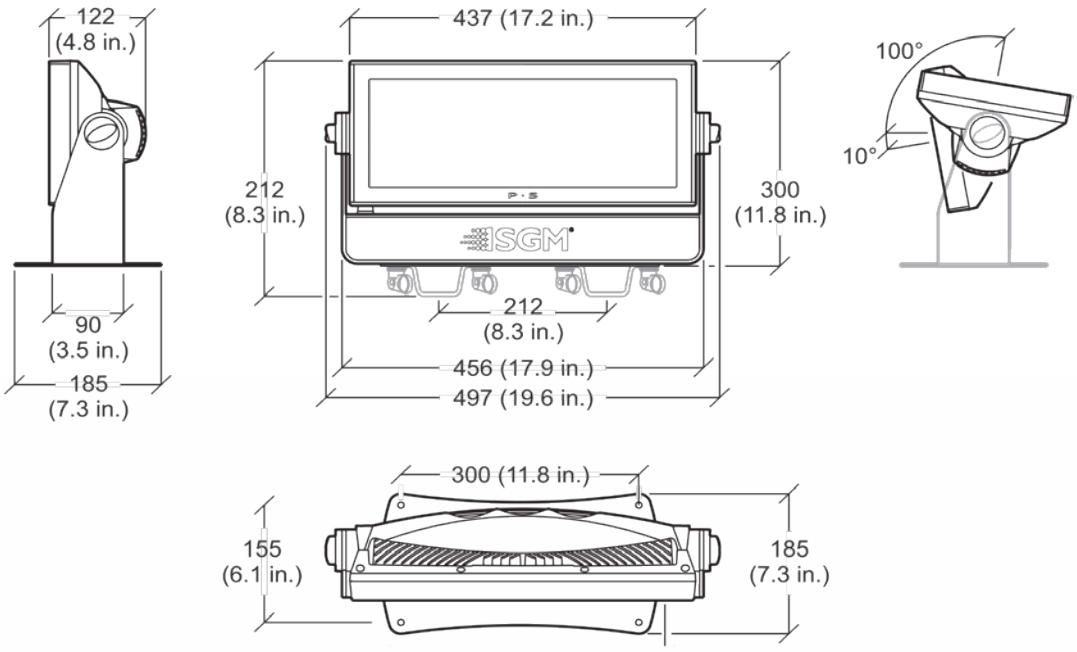

Connection diagram

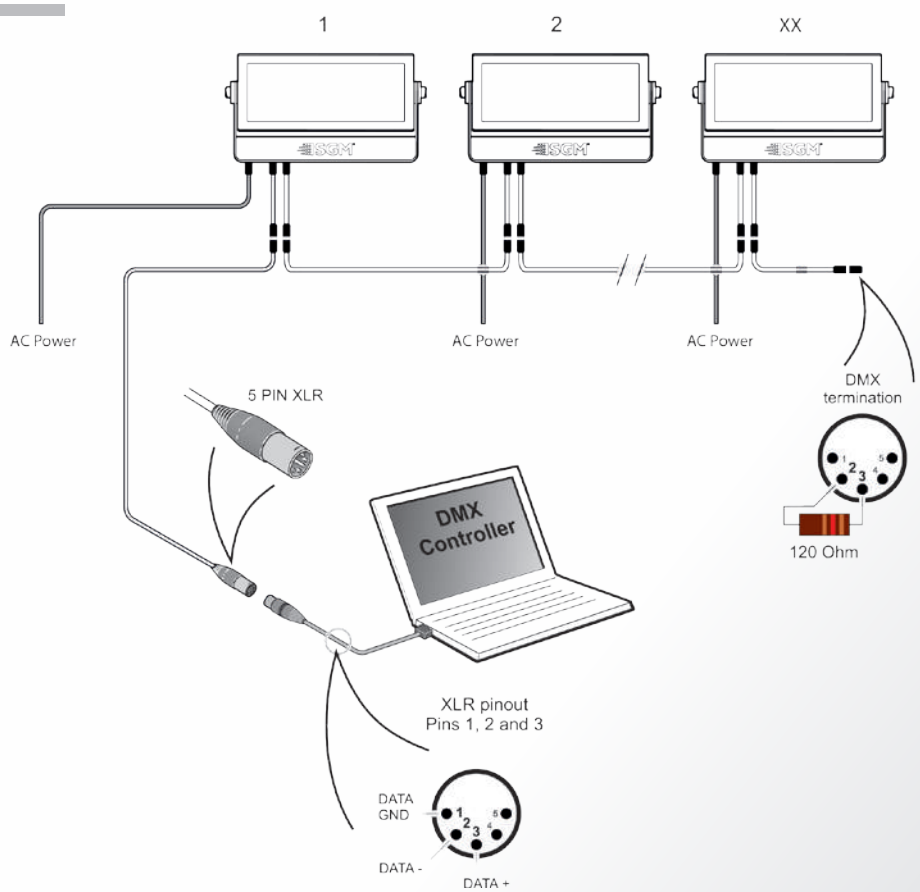

Beam angles

Narrow: 15°

Medium: 21°

Wide: 43°

LUX diagram P•5 W White

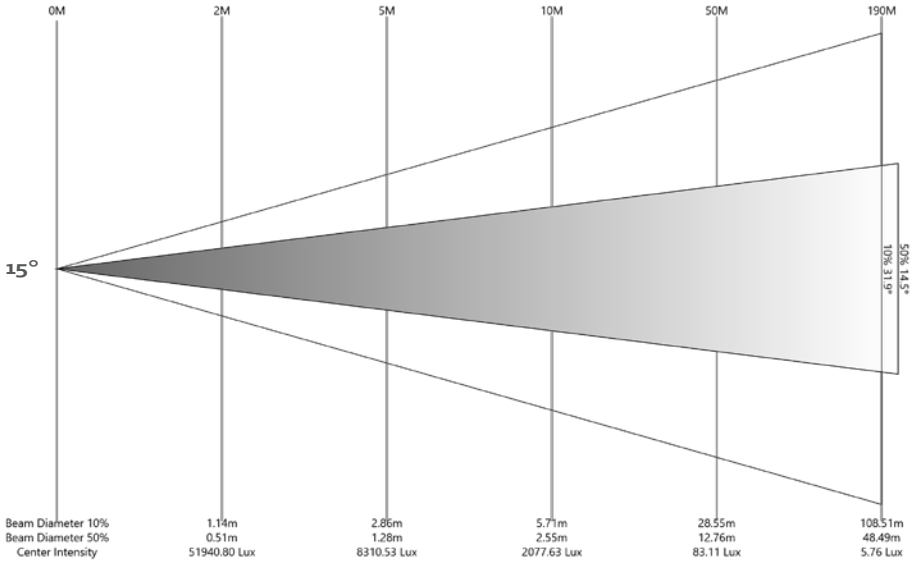

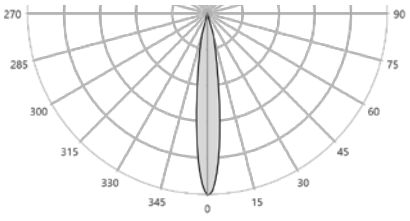

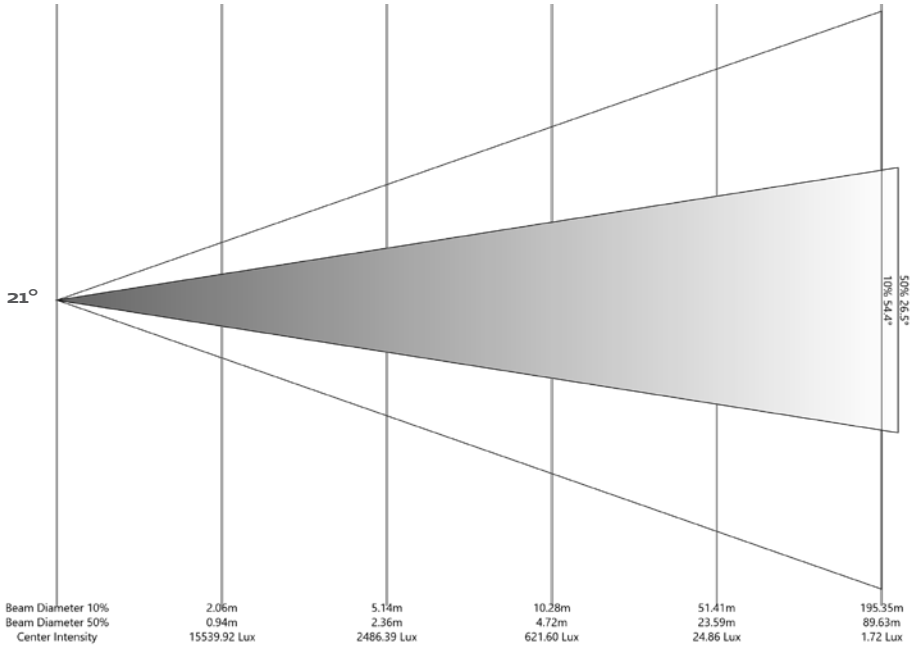

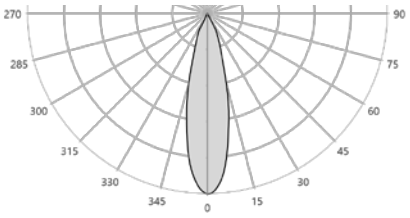

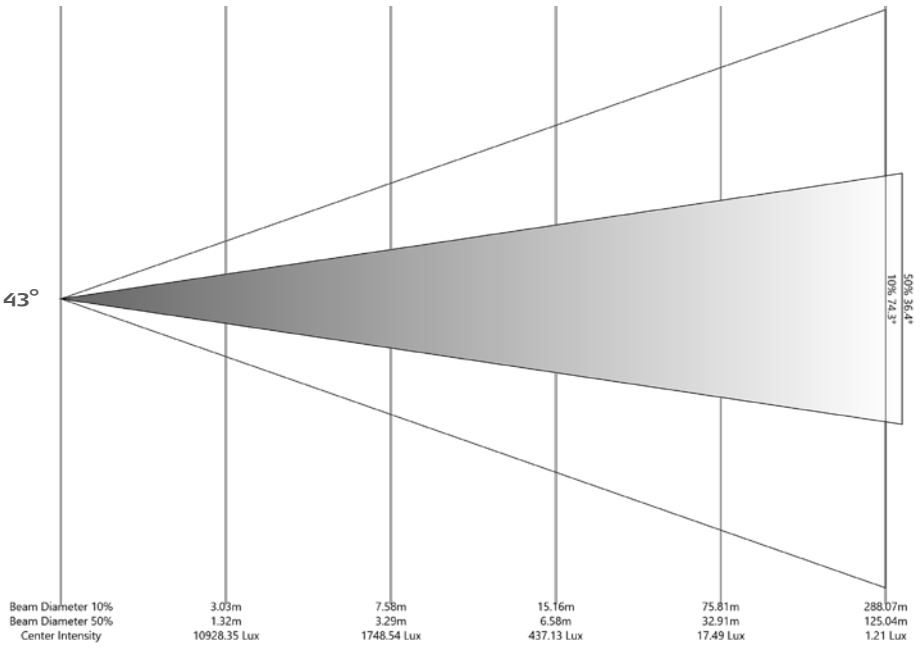

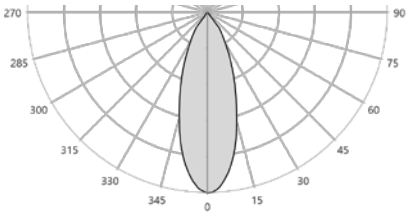

LUX diagram P•5 TW All on

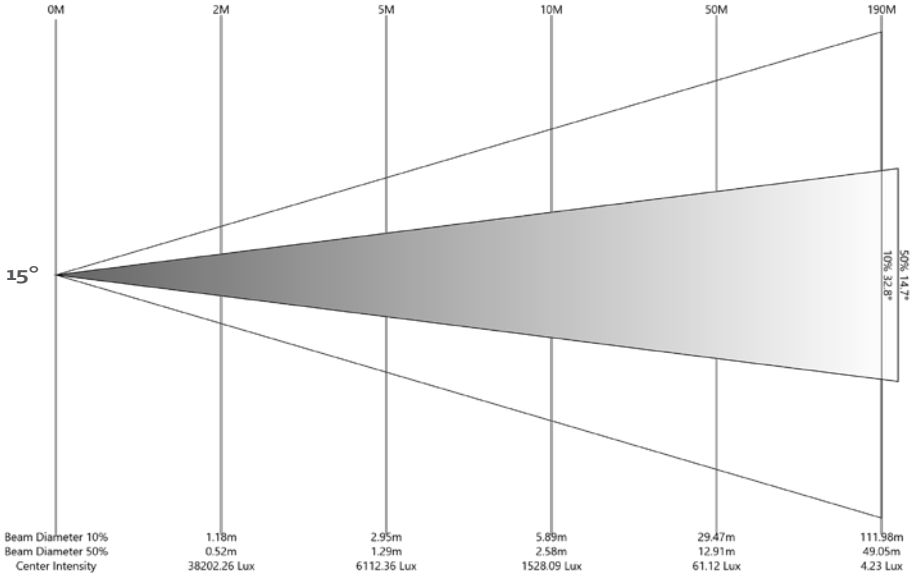

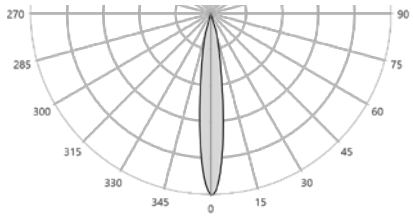

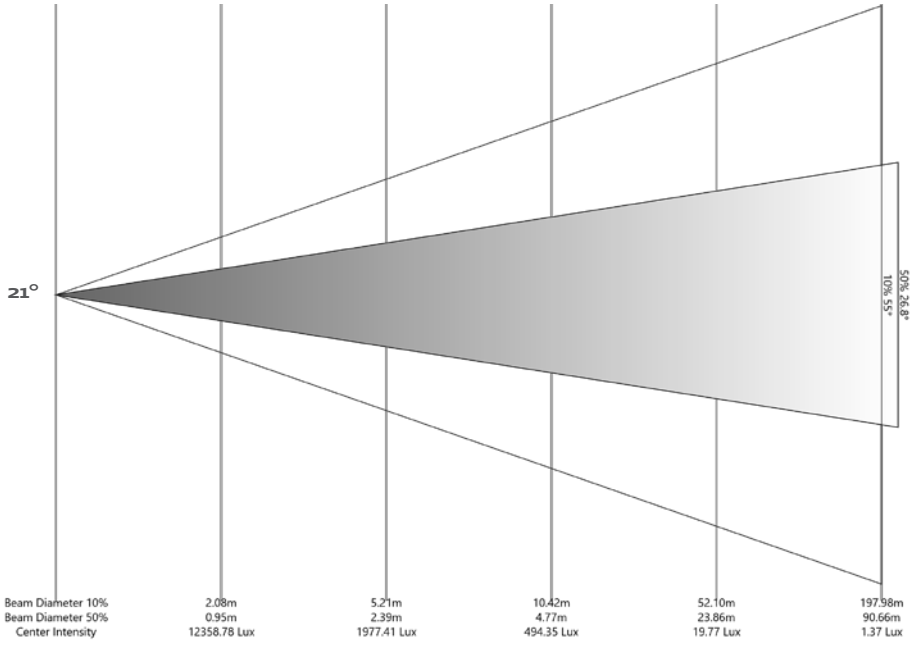

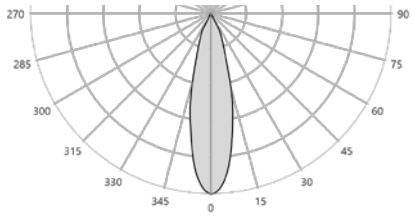

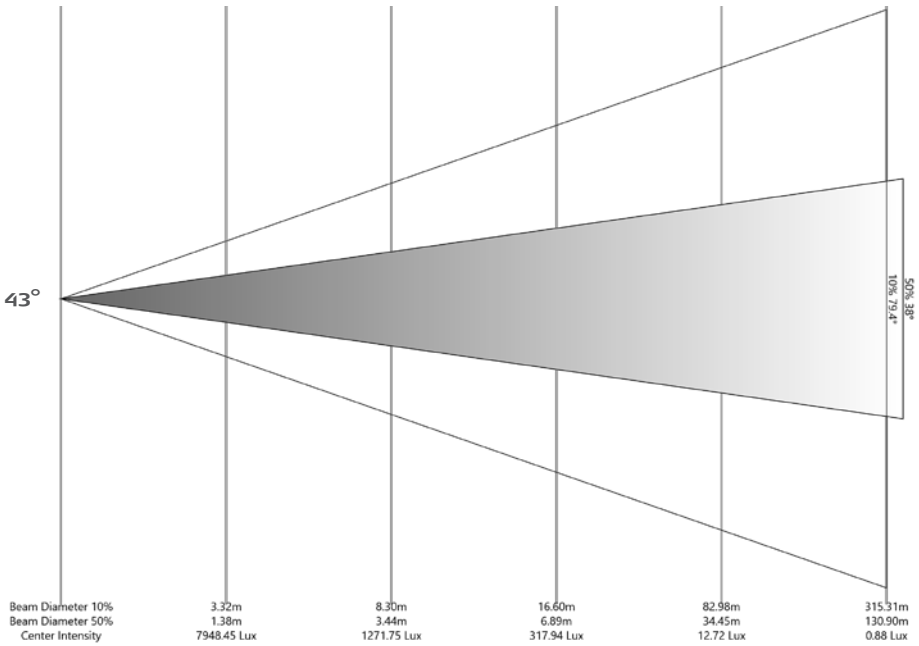

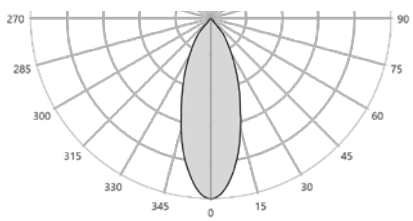

P•5 W
Specifications

Optics	Light source	44 x high-power 10W cool white LEDs (6,400K)
	LEDs expected lifetime	50,000 hours*
	Interchangable lens option	15°, 21° & 43°
Photometric	Light output	23,700 lumen** (43° lens)
	Efficacy	56,4 lm/W
Features	Tilt	0 - 190°
Electrical	AC power	208 - 240V nominal 50/60Hz
	Maximum inrush current @ 240VAC	20A
	Maximum power consumption	450 W (all LEDs on)
	Typical power consumption	420 W (all LEDs on)
	Power factor	0.98 PF (230 V)
Programming and control	Protocol	USITT DMX512 A
		Wireless DMX (LumenRadio)
	Setting and addressing	RDM
		RFID
		OLED graphical display / 4 buttons
		Software upgradable with SGM USB uploader cable (P/N:83062011)
	Standalone mode	Quick color
		Up to 24 programmable scenes
		Standalone mode programmable by RFID
	DMX channels	1 or 2 DMX channels
Physical	Dimensions (L x H x W)	497 x 268 x 122 mm (19.6 x 10.6 x 4.8 in)
	Weight	8.9 kg (19.6 lbs.)
	Material	Aluminium
	Lens	PE and tempered glass front
	IP class	IP65
	Color options	White – RAL 9010
		Black – RAL 9004
		Custom color – any RAL
Installation	Mounting points	2 x two quarter-turn locking points for one or two Omega brackets
	Orientation	Any
	Rigging possibilities	Floor stand (included) or hanging (Omega clamps included)
	Safety features	Bottom mount for safety wire
		Minimum distance to combustible materials: 0.3 m (11 in.)
		Minimum distance to illuminated surfaces: 0.3 m (11 in.)
Thermal	Temperature range, Operating	–40° to +50°C (-40° to +122°F)
	Temperature range, Start-up	–20° to +50°C (-4° to +122°F)
	Temperature range, Storage	–40° to +80°C (-40° to +176°F)
	Humidity (max.)	98%
	Cooling	Active, forced air, temperature-regulated, low noise
Connections	DMX data in/out	IP65 Neutrik HD locking XLR 5-pin cable 0.5 m for DMX in and out
	Power	Power cable 1 m with bare ends
Certified to	CSA Std. C22.2 No. 166	
Conforms to	UL Std. 1573	
	2014/35/EU: Low Voltage Directive	EN 60598-1, EN 60598-2-17, EN 62471, EN 60529
	2014/30/EU: EMC Directive	EN 55103-1, EN 55103-2, EN 55015, EN 61547, EN 61000-3-2, EN 61000-3-3
	RoHS2 Directive	2011/65/EU
Included items	Included items	Floor stand (incl. screws)
		2 pcs. Omega brackets
		Wireless DMX antenna
		User manual
Fixtures and accessories	Fixtures	Order no: 80030521 - P-5 W Wash, 43deg, Std, BL
		Order no: 80030549 - P-5 W Wash, 43deg, Std, WH
		Order no: 80030552 - P-5 W Wash, 43deg, Std, CU
		Order no: 80030520 - P-5 W Wash, 21deg, Std, BL
		Order no: 80030550 - P-5 W Wash, 21deg, Std, WH
		Order no: 80030553 - P-5 W Wash, 21deg, Std, CU
		Order no: 80030516 - P-5 W Wash, 15deg, Std, BL
		Order no: 80030551 - P-5 W Wash, 15deg, Std, WH
		Order no: 80030554 - P-5 W Wash, 15deg, Std, CU
	Lens/s	Order no: 83061118 - P-5, Lens kit (43°)
		Order no: 83061117 - P-5, Lens kit (21°)
		Order no: 83061116 - P-5, Lens kit (15°)
	Cables	Order no: 83062011 - SGM USB uploader cable
	Brackets	Order no: 83060603 - BCC-2 Dual bracket
		Order no: 83060604 - BCC-4 Quad bracket
		Order no: 83060602 - Omega bracket
	Floorstand	Order no: 83060610 - Floorstand for i, P, Q and X series with 1/4-turn fasteners
	Barndoor	Order no: 83061119 - Accessory holder i-5 / P-5 Series
		Order no: 83061120 - Barndoor 4-way, i-5, P-5, X-5 & Q-7 Series
		Order no: 83061121 - Barndoor 8-way, i-5, P-5, X-5 & Q-7 Series
		Order no: 83061122 - Color frame, i-5, P-5, X-5 & Q-7 Series
	Flightcase	Order no: 82051501 - Flightcase for 4 pcs. of i-5/P-5/Q-7/X-5
		Order no: 82051502 - Flightcase for 4 pcs. of i-5/P-5/Q-7/X-5 incl. barndoors

**Figures provided by manufacturer and obtained under manufacturer's test conditions*

***Goniometer Scan / SGM Illumination Lab 1.6.0.0*

BL = Black (RAL 9004)

WH = White (RAL 9010)

CU = Custom Color (Any RAL color)

P•5 TW
Specifications

Optics	Light source	44 x high-power 10W White LEDs (2,200 - 5,300K)
	LEDs expected lifetime	50,000 hours*
	Interchangable lens option	15°, 21° & 43°
Photometric	Light output	22,300 lumen** (43° lens)
	CRI	86
	Efficacy	53 lm/W
Features	Tilt	0 - 190°
Electrical	AC power	208 - 240V nominal 50/60Hz
	Maximum inrush current @ 240VAC	20A
	Maximum power consumption	450 W (all LEDs on)
	Typical power consumption	420 W (all LEDs on)
	Power factor	0.98 PF (230 V)
Programming and control	Protocol	USITT DMX512 A
		Wireless DMX (LumenRadio)
	Setting and addressing	RDM
		RFID
		Oled graphical display / 4 buttons
		Software upgradable with SGM USB uploader cable (P/N:83062011)
	Stand alone mode	Quick color
		Up to 24 programmable scenes
		Stand alone mode programmable by RFID
	DMX channels	2, 4, 6 or 8
Physical	Dimensions (L x H x W)	497 x 268 x 122 mm (19.6 x 10.6 x 4.8 in)
	Weight	8.9 kg (19.6 lbs.)
	Material	Aluminium
	Lens	PE and tempered glass front
	IP class	IP65
	Color options	White – RAL 9010
		Black – RAL 9004
		Custom color – any RAL
Installation	Mounting points	2 x two quarter-turn locking points for one or two Omega brackets
	Orientation	Any
	Rigging possibilities	Floor stand (included) or hanging (Omega Clamps included)
	Safety features	Bottom mount for Safety wire
		Minimum distance to combustible materials: 0.3 m (11 in.)
		Minimum distance to illuminated surfaces: 0.3 m (11 in.)
Thermal	Temperature range, Operating	–40° to +50°C (-40° to +122°F)
	Temperature range, Start-up	–20° to +50°C (-4° to +122°F)
	Temperature range, Storage	–40° to +80°C (-40° to +176°F)
	Humidity (max.)	98%
	Cooling	Active, forced air, temperature-regulated, low noise
Connections	DMX data in/out	IP65 Neutrik HD locking XLR 5-pin cable 0.5m for DMX in and out
	Power	Power cable 1m with bare ends
Certified to Conforms to	CSA Std. C22.2 No. 166 UL Std. 1573	
	2014/35/EU: Low Voltage Directive	EN 60598-1, EN 60598-2-17, EN 62471, EN 60529
	2014/30/EU: EMC Directive	EN 55103-1, EN 55103-2, EN 55015, EN 61547, EN 61000-3-2, EN 61000-3-3
	RoHS2 Directive	2011/65/EU
Included items	Included items	Floor stand (incl. screws)
		2 pcs Omega brackets
		Wireless DMX antenna
		User manual
Fixtures and accessories	Fixtures	Order no: 80030523 - P-5 TW Wash, 43deg, Std, BL
		Order no: 80030555 - P-5 TW Wash, 43deg, Std, WH
		Order no: 80030558 - P-5 TW Wash, 43deg, Std, CU
		Order no: 80030519 - P-5 TW Wash, 21deg, Std, BL
		Order no: 80030556 - P-5 TW Wash, 21deg, Std, WH
		Order no: 80030559 - P-5 TW Wash, 21deg, Std, CU
		Order no: 80030522 - P-5 TW Wash, 15deg, Std, BL
		Order no: 80030557 - P-5 TW Wash, 15deg, Std, WH
		Order no: 80030560 - P-5 TW Wash, 15deg, Std, CU
	Lens/s	Order no: 83061118 - P-5, Lens kit (43°)
		Order no: 83061117 - P-5, Lens kit (21°)
		Order no: 83061116 - P-5, Lens kit (15°)
	Cables	Order no: 83062011 - SGM USB uploader cable
	Brackets	Order no: 83060603 - BCC-2 Dual bracket
		Order no: 83060604 - BCC-4 Quad bracket
		Order no: 83060602 - Omega bracket
	Floorstand	Order no: 83060610 - Floorstand for i, P, Q and X series with 1/4-turn fasteners
	Barndoor	Order no: 83061119 - Accessory holder i-5 / P-5 Series
		Order no: 83061120 - Barndoor 4-way, i-5, P-5, X-5 & Q-7 Series
		Order no: 83061121 - Barndoor 8-way, i-5, P-5, X-5 & Q-7 Series
		Order no: 83061122 - Color frame, i-5, P-5, X-5 & Q-7 Series
	Flightcase	Order no: 82051501 - Flightcase for 4 pcs. of i-5/P-5/Q-7/X-5
		Order no: 82051502 - Flightcase for 4 pcs. of i-5/P-5/Q-7/X-5 incl. barndoors

**Figures provided by manufacturer and obtained under manufacturer's test conditions*

***Goniometer Scan / SGM Illumination Lab 1.6.0.0*

BL = Black (RAL 9004)

WH = White (RAL 9010)

CU = Custom Color (Any RAL color)

COMPACT
SIZE

IP65 RoHS CE

The Q·2 & Q·2 W

RGBW color and white LED flood, blind, strobe

The Q-2 series consists of two powerful and compact LED flood, blind, strobe lights.

Based on the groundbreaking Q-7 and Q-7 W technology, the Q-2 and the Q-2 W come in a very small and robust chassis, each weighing only 6 kilos. Taking it a step further, the Q-2's 864 LEDs are divided into three individually controllable segments with RGBW colors. Q-2 W is divided into 12 individually controllable segments, which is revolutionary for such a compact device. Therefore implementing the Q-2/Q-2 W in any lighting design generates wide-ranging color and effect combinations.

The Q-2 has a light output of 8,800 lumen and an efficacy of 44 lm/W, whereas the Q-2 W has a staggering cool white light output of 22,800 lumen and an efficacy of 114 lm/W.

Their extremely compact size and low weight ensures quick and easy setup. Naturally, the two fixtures come with an IP65-rating which makes them suitable for any outdoor application and a fixed beam angle of 110°.

Features

- Cutting-edge, high-performance LED product
- High-power LEDs
- User-friendly setup via simple control buttons and OLED display
- Numerous mounting options and simple positioning
- Lightweight and aesthetic Danish design
- High output, low consumption
- Small footprint
- Suitable for multiple applications
- LED alternative to traditional flood lights and strobes
- IP65-rated
- Practically maintenance-free

High applicability

- Outdoor/indoor applications
- TV studios
- Theatres
- Exhibition stands
- Entertainment designs
- Touring
- Staging
- Clubs
- Concerts
- Rental

Dimensions

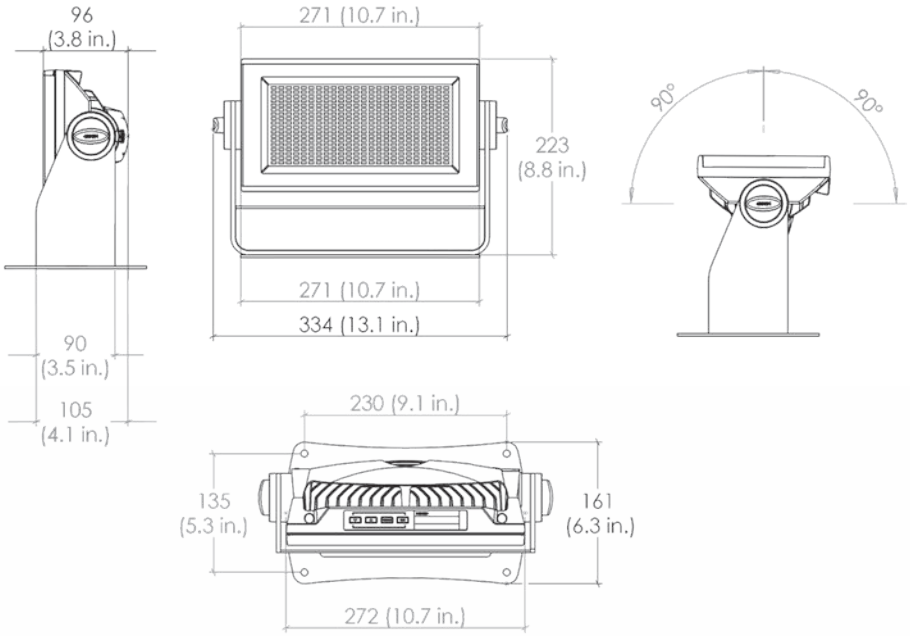

Connection diagram

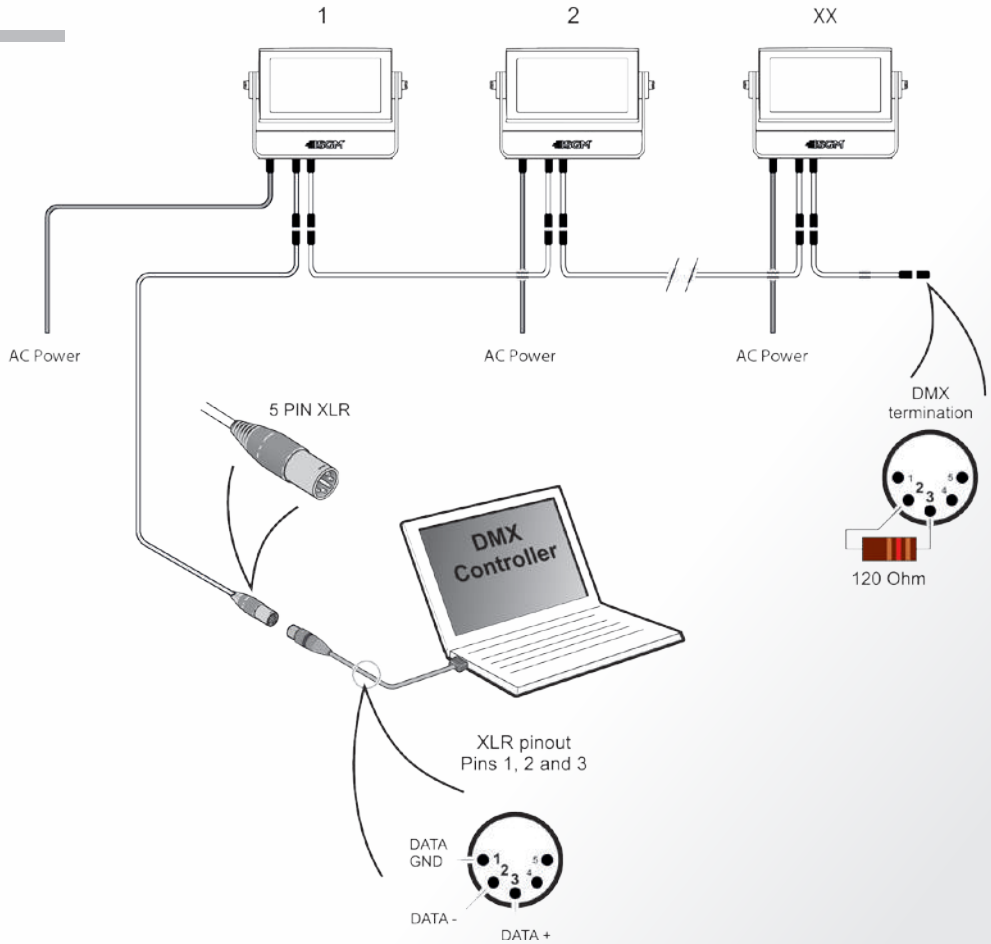

Beam angle

Beam angle: 110°

LUX diagram Q•2 All on Q•2W White

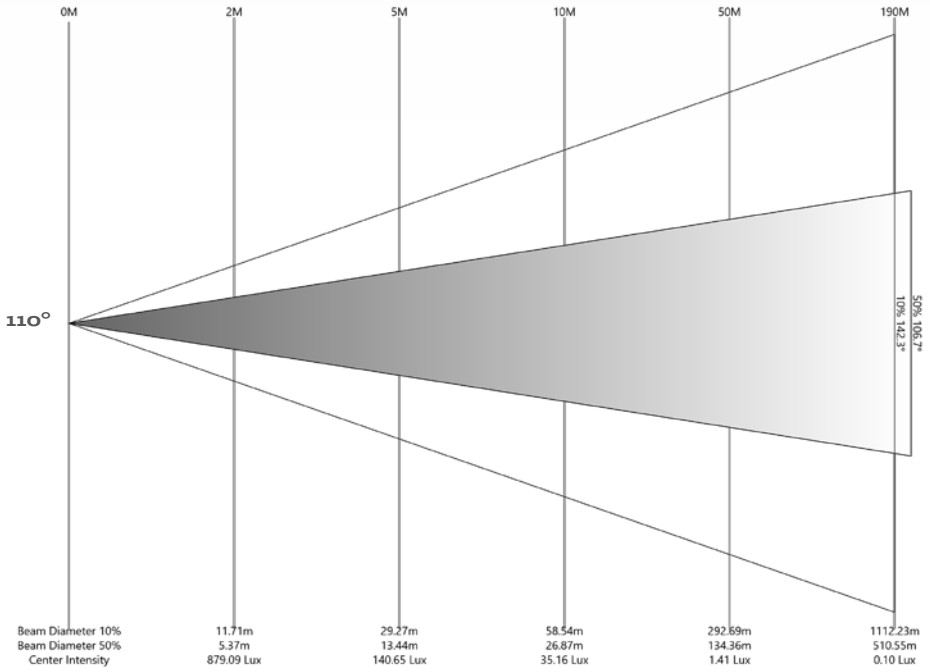

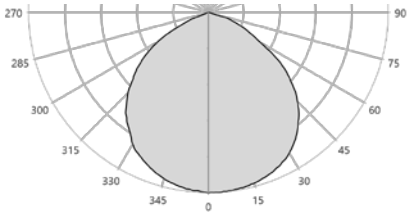

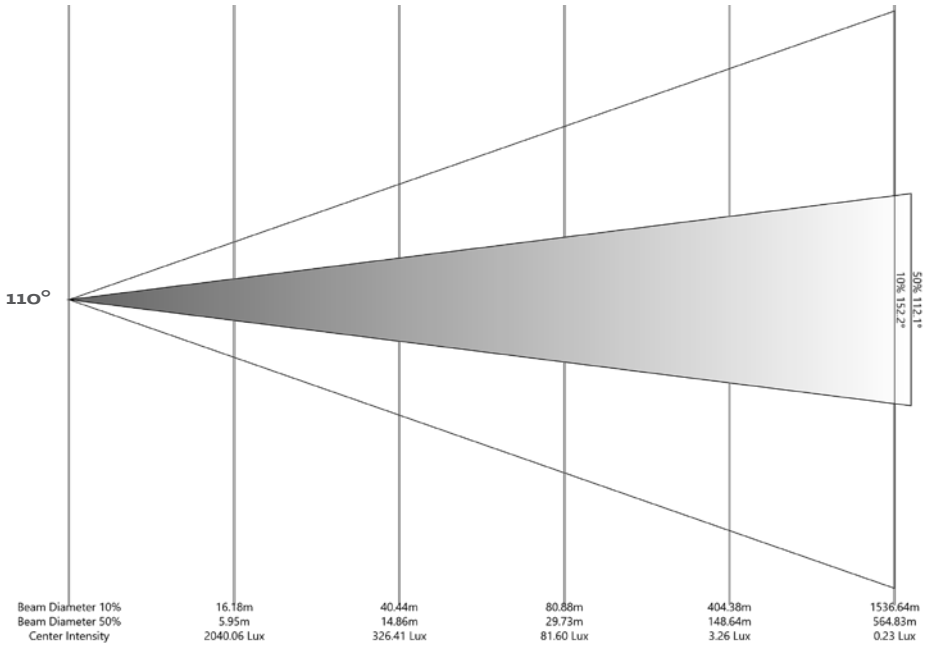

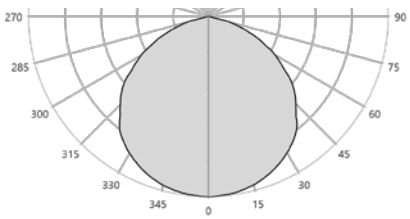

Q•2
Specifications

Optics	Light source	864 x RGBW SMD LEDs (5,700K)
	LEDs expected lifetime	50,000 hours*
	Lens options	110° fixed
Photometric	Light output	8,800 lm**
	Efficacy	44 lm/W
Features	Pan / tilt	0° / 190°
	LED panel	3 individually controllable segments
Electrical	AC power nominal	100 - 277V 50/60Hz
	AC power max rating	90 - 305V 50/60Hz
	Maximum inrush current @ 240VAC	75A
	Maximum power consumption	275 W (all LEDs on)
	Typical power consumption	200 W (all LEDs on)
	Power factor	0.98 PF (230 V)
Programming and Control	Protocol	USITT DMX512 A
	Setting and addressing	RDM
		OLED graphical display / 4 buttons
		Software upgradable with SGM USB uploader cable (P/N:83062011)
	Stand alone mode	Quick color
		Up to 24 programmable scenes
	DMX channels	3, 6, 9, 12, 15 or 22
Physical	Dimensions (L x H x W)	334 x 223 x 105 mm (13.2 x 8.8 x 4.1 in)
	Weight	6.0 kg (13.2 lbs.)
	Material	Aluminium
	Lens	Tempered glass front
	IP class	IP65
	Color options	White – RAL 9010
		Black – RAL 9004
		Custom color – any RAL
Installation	Mounting points	Two quarter-turn locking points for one Omega bracket
	Orientation	Any
	Rigging possibilities	Floor stand (included) or hanging (Omega clamp included)
	Safety features	Bottom mount for safety wire
		Minimum distance to combustible materials: 0.3 m (11 in.)
		Minimum distance to illuminated surfaces: 0.3 m (11 in.)
Thermal	Temperature range, Operating	–40° to +50°C (-40° to +122°F)
	Temperature range, Start-up	–20° to +50°C (-4° to +122°F)
	Temperature range, Storage	–40° to +80°C (-40° to +176°F)
	Humidity (max.)	98%
	Cooling	Active, forced air, temperature-regulated, low noise
Connections	DMX data in/out	IP65 Neutrik HD locking XLR 5-pin cable 0.5m, for DMX in and out
	Power	Power cable 1m with bare ends
Certified to	CSA E60598-1:02, Ed: 2	
	CSA-E598-2-17-98, Ed: 1	
Conforms to	UL Std. 1573	
	2014/35/EU: Low Voltage Directive	EN 60598-1, EN 60598-2-17, EN 62471, EN 60529
	2014/30/EU: EMC Directive	EN 55103-1, EN 55103-2, EN 55015, EN 61547, EN 61000-3-2, EN 61000-3-3
	RoHS2 Directive	2011/65/EU
Included items	Included items	Floor stand (incl. screws)
		1 Omega bracket
		User manual
Fixtures and accessories	Fixtures	Order no: 80030535 - Q-2 Color Flood, Std, BL
		Order no: 80030565 - Q-2 Color Flood, Std, WH
		Order no: 80030566 - Q-2 Color Flood, Std, CU
	Cables	Order no: 83062011 - SGM USB uploader cable
	Bracket	Order no: 83060602 - Omega bracket
	Barndoor	Order no: 83061127 - Accessory holder i-2/P-2 series
		Order no: 83061129 - Barndoor 4-way, i-2/P-2/Q-2 series
		Order no: 83061130 - Barndoor 8-way, i-2/P-2/Q-2 series
		Order no: 83061131 - Color frame, i-2/P-2/Q-2 series
	Flightcase	Order no: 82051503 - Flightcase for 4 pcs. of i-2/P-2/Q-2 incl. barndoors

**Figures provided by manufacturer and obtained under manufacturer's test conditions*

***Goniometer Scan / SGM Illumination Lab 1.6.0.0*

BL = Black (RAL 9004)

WH = White (RAL 9010)

CU = Custom Color (Any RAL color)

Q•2 W
Specifications

Optics	Light source	432 x cool white LEDs (5,700K)
	LEDs expected lifetime	50,000 hours*
	Lens options	110° fixed
Photometric	Light output	22,800 lm**
	Efficacy	114 lm/W
Features	Pan / tilt	0° / 190°
	LED panel	12 individually controllable segments
Electrical	AC power nominal	100 - 277V 50/60Hz
	AC power max rating	90 - 305V 50/60Hz
	Maximum inrush current @ 240VAC	75A
	Maximum power consumption	275 W (all LEDs on)
	Typical power consumption	200 W (all LEDs on)
	Power factor	0.98 PF (230 V)
Programming and Control	Protocol	USITT DMX512 A
	Setting and addressing	RDM
		OLED graphical display / 4 buttons
		Software upgradable with SGM USB uploader cable (P/N:83062011)
	Stand alone mode	Quick color
		Up to 24 programmable scenes
	DMX channels	1, 3, 6, 12, 14 or 24
Physical	Dimensions (L x H x W)	334 x 223 x 105 mm (13.2 x 8.8 x 4.1 in)
	Weight	6.0 kg (13.2 lbs.)
	Material	Aluminium
	Lens	Tempered glass front
	IP class	IP65
	Color options	White – RAL 9010
		Black – RAL 9004
		Custom color – any RAL
Installation	Mounting points	Two quarter-turn locking points for one Omega bracket
	Orientation	Any
	Rigging possibilities	Floor stand (included) or hanging (Omega clamp included)
	Safety features	Bottom mount for safety wire
		Minimum distance to combustible materials: 0.3 m (11 in.)
		Minimum distance to illuminated surfaces: 0.3 m (11 in.)
Thermal	Temperature range, Operating	–40° to +50°C (-40° to +122°F)
	Temperature range, Start-up	–20° to +50°C (-4° to +122°F)
	Temperature range, Storage	–40° to +80°C (-40° to +176°F)
	Humidity (max.)	98%
	Cooling	Active, forced air, temperature-regulated, low noise
Connections	DMX data in/out	IP65 Neutrik HD locking XLR 5-pin cable 0.5m, for DMX in and out
		Power cable 1m with bare ends
Certified to	CSA E60598-1:02, Ed: 2	
	CSA-E598-2-17-98, Ed: 1	
Conforms to	UL Std. 1573	
	2014/35/EU: Low Voltage Directive	EN 60598-1, EN 60598-2-17, EN 62471, EN 60529
	2014/30/EU: EMC Directive	EN 55103-1, EN 55103-2, EN 55015, EN 61547, EN 61000-3-2, EN 61000-3-3
	RoHS2 Directive	2011/65/EU
Included items	Included items	Floor stand (incl. screws)
		1 Omega bracket
		User manual
Fixtures and accessories	Fixtures	Order no: 80030536 - Q-2 W Color Flood, Std, BL
		Order no: 80030567 - Q-2 W Color Flood, Std, WH
		Order no: 80030568 - Q-2 W Color Flood, Std, CU
	Cables	Order no: 83062011 - SGM USB uploader cable
	Bracket	Order no: 83060602 - Omega bracket
	Barndoor	Order no: 83061127 - Accessory holder i-2/P-2 series
		Order no: 83061129 - Barndoor 4-way, i-2/P-2/Q-2 series
		Order no: 83061130 - Barndoor 8-way, i-2/P-2/Q-2 series
		Order no: 83061131 - Color frame, i-2/P-2/Q-2 series
	Flightcase	Order no: 82051503 - Flightcase for 4 pcs. of i-2/P-2/Q-2 incl. barndoors

**Figures provided by manufacturer and obtained under manufacturer's test conditions*

***Goniometer Scan / SGM Illumination Lab 1.6.0.0*

BL = Black (RAL 9004)

WH = White (RAL 9010)

CU = Custom Color (Any RAL color)

MULTI-PURPOSE
LED LIGHT

IP65 RoHS

The Q·7 & Q·7 W

RGBW color and white LED flood, blind, strobe

The Q-7 series consists of two powerful and versatile LED lights.

The Q-7 is a low-profile and compact RGBW fixture, which contains over 2,000 powerful RGBW LEDs, while the Q-7 W contains 1,000 cool white LEDs.

Both units perform as powerful and adjustable wall washers with a beam angle of 110°. The IP65-rated lights have a small physical footprint, which makes them ideal fixtures for outdoor use for buildings, facades, structures and attractions. However, they are just as suitable for indoor applications such as TV studios, theaters and exhibition stands – any application where a flicker-free wide flood of colored or crisp white light as well as a bright, flashing strobe and blind effects are required.

The Q-7 has a high output of over 22,500 lumens, while the Q-7 W has a staggering output of 47,800 lumens.

Features

- Cutting-edge, high-performance LED product
- High-power LEDs
- User-friendly setup via simple control buttons and OLED display
- Built-in wireless DMX
- Configuration via RFID from smartphone
- Numerous mounting options and simple positioning
- Lightweight and aesthetic Danish design
- High output, low consumption
- Small footprint
- Suitable for multiple applications
- LED alternative to traditional flood lights and strobes
- IP65-rated
- Practically maintenance-free

High applicability

- Outdoor/indoor applications
- TV studios
- Theatres
- Exhibition stands
- Entertainment designs
- Touring
- Staging
- Clubs
- Concerts
- Rental

The Q-7 & Q-7 W patents

The Q-7 and Q-7 W are covered by several patents safeguarding the uniqueness of the product.

The Q-7 and Q-7 W are protected under the PCT patent with **No. WO 2013/034968.** They also have a Registered Community Design patent valid in Europe: **No. 001914094-0001/0030.**

The Q-7 and Q-7 W are registered for **Design Patent** in the United States and China.

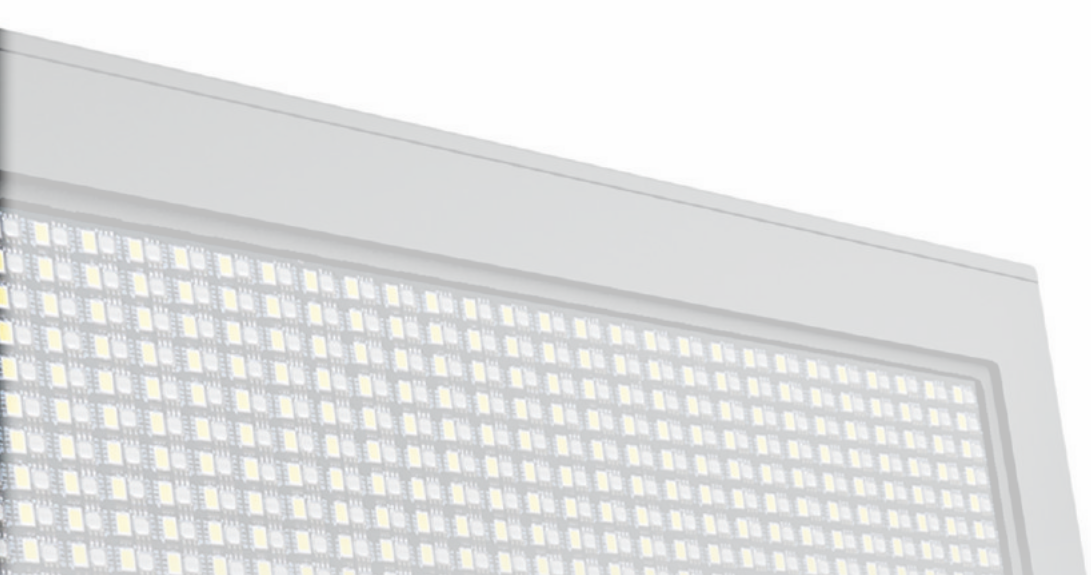

Dimensions

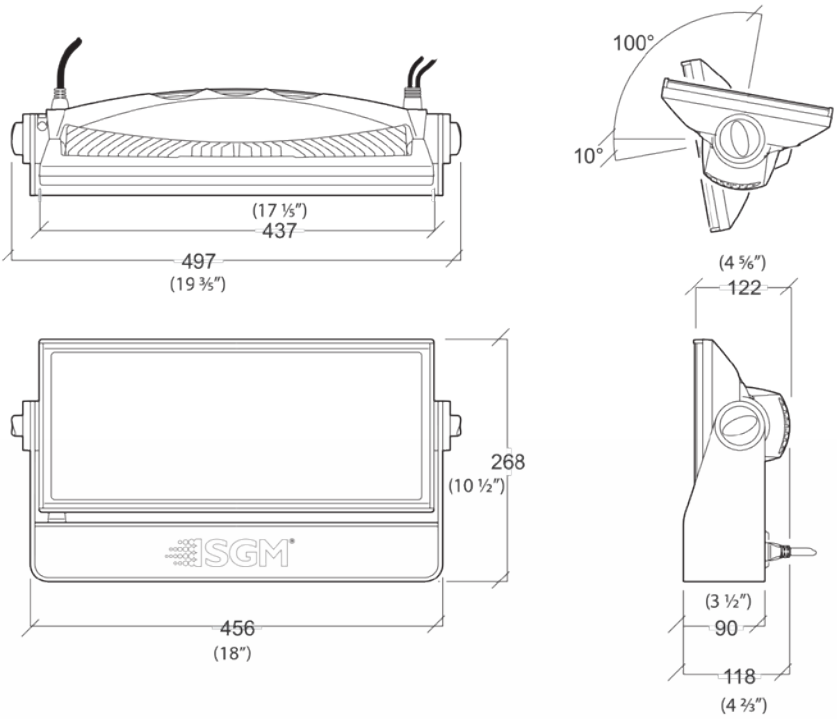

Connection diagram

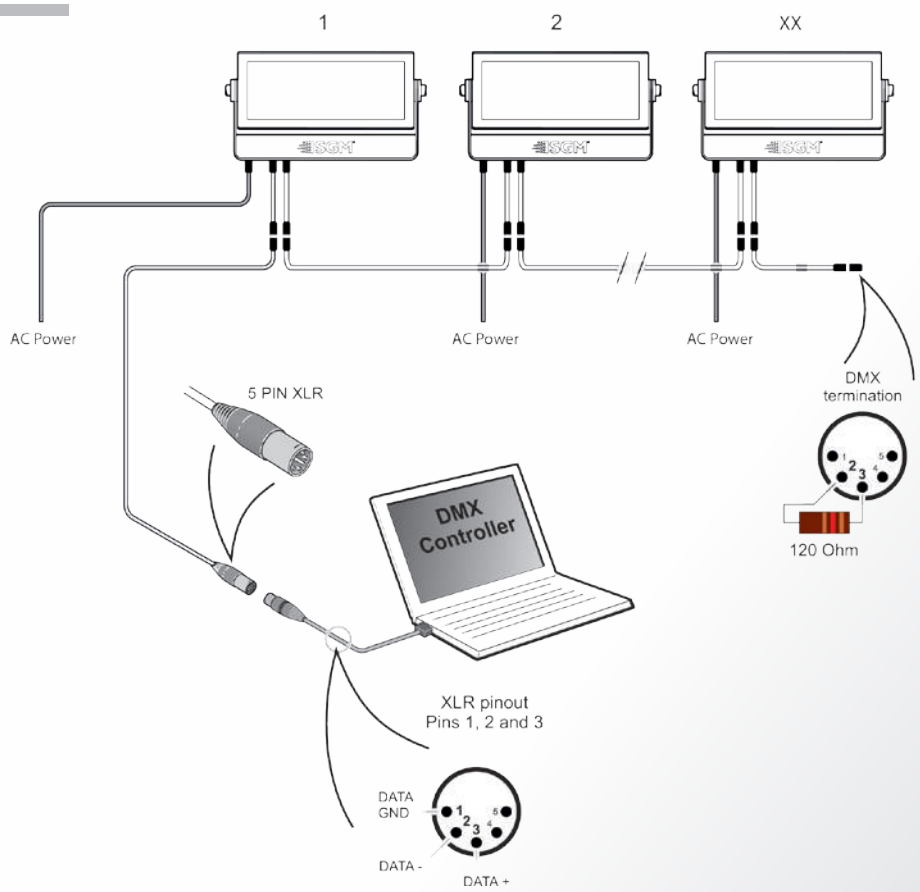

Beam angle

Beam angle: 110°

LUX diagram Q•7 All on Q•7 W White

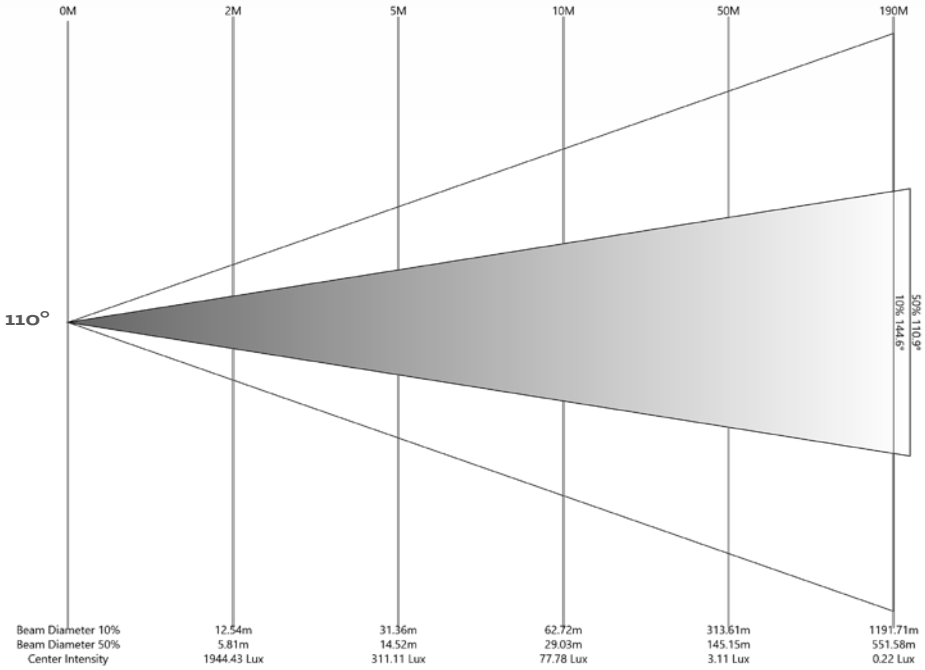

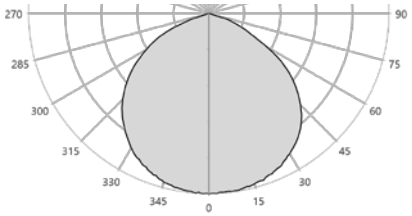

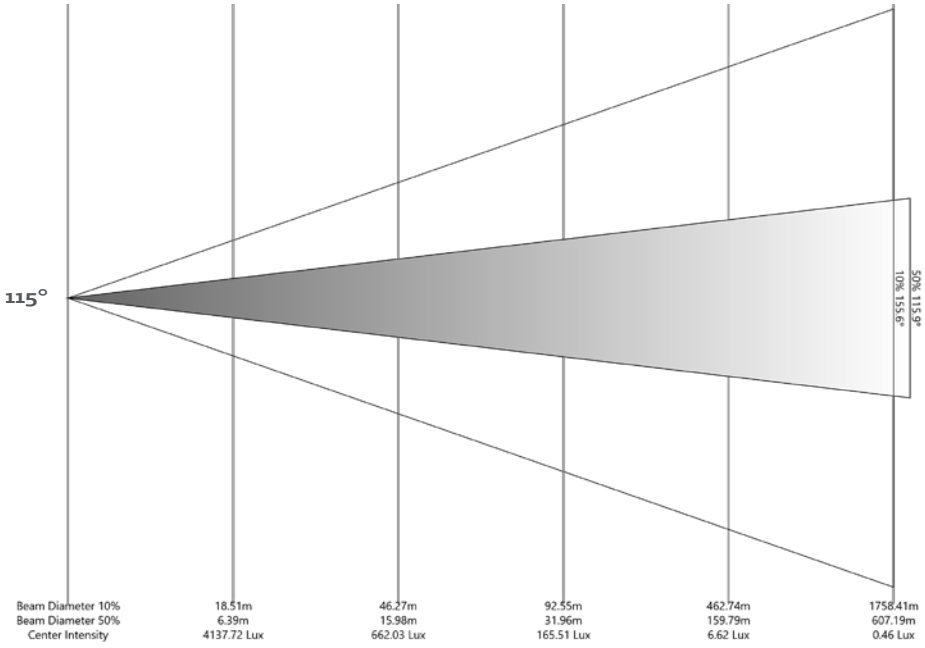

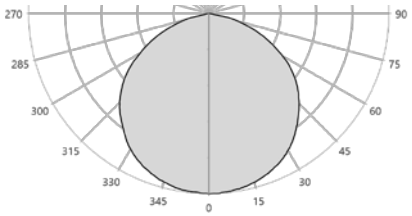

The Q-7:
pipa award winner 2015

The Q-7 won in the category of Best Lighting Product at the Prolight+Sound International Press Award 2015, also known as the pipa award.

prolight+sound
international
press award
pipa 2015
Baterista Al Sur
digitalDrummer
Meet Music
Backstage
Música & Mercado
Musictube
Violão PRO
Canadian Music Trade
Canadian Musician
Professional Lighting & Production
Professional Sound
Muzikus
Musikeren
Soundcheck
Riffi
BASS PART
Batteur
Guitarist Magazine
GUITAR PART
Keyboards Recording
SONO Magazine
drums & percussion
Event Partner
Gitarre & Bass
Keyboards
musikmachen.de
Production Partner
Professional System
promedianews.de
Sound & Recording
Sticks
eLive
Medientechnika/Zenész
Zenész Magazin
Pro Sound Systems
Gitarplus
Audio Control Magazine
Aws
BigBox
Chitarre
Computer Music Studio
Connessioni
Drum Club
Guitar Club
Sound & Lite
Estrada i Studio
Gitarzysta
Infomusic.pl
Live Sound & Installation
Perkusista
Top Bass
Top Drummer
Top Guitar
Top Studio
inAVate Magazine
Light.Sound.News
Music Box
Pro-Systems
Computer Music Spain
Future Music Spain
Guitarrista Online
Hispasonic
Sintemania.com
Sonicspace.es
De Bassist
gearjunkies.com
Gitarist
Interface
Musicmaker
AV & Stage
Slagwerkkrant
Audio Media Magazine
iDrum Magazine
PSNEUROPE
Resolution Magazine
DJ Mag
Drummer Magazine
Future Music
Guitar Techniques
Computer Music
Acoustic Guitar
audioXpress
Bass Gear Magazine
Bass Player
Downbeat
Drum!
Electronic Musician
Guitar Aficionado
Guitar Player
Harmony Central
Keyboard
Live Sound USA
MIX
Modern Drummer
Music Player Network
Music Trades Magazines
Premier Guitar
Pro Audio Review

Q•7
Specifications

Optics	Light source	2,000 x RGBW SMD LEDs (5,700K)
	LEDs expected lifetime	50,000 hours*
	Lens	110° fixed
Photometric	Light output	22,500 lm (all LEDs on)**
		2,600 lm (red)**
		5,000 lm (green)**
		1,200 lm (blue)**
		12,000 lm (white)**
	Efficacy	50 lm/W
Features	Tilt	0 - 190°
Electrical	AC power	208 - 240 V nominal 50/60 Hz
	Maximum inrush current @ 240VAC	20A
	Maximum power consumption	465 W (all LEDs on)
	Typical power consumption	450 W (all LEDs on)
	Power factor	0.99 PF (230 V)
Programming and Control	Protocol	USITT DMX 512 A
		Wireless DMX (LumenRadio)
	Setting and addressing	RDM
		RFID
		OLED graphical display / 4 buttons
		Software upgradable with SGM USB uploader cable (P/N:83062011)
	Standalone mode	Quick color
		Up to 24 programmable scenes
		Standalone mode programmable by RFID
	DMX channels	3, 4, 6 or 8
Physical	Dimensions (L x H x W)	497 x 268 x 122 mm (19.6 x 10.6 x 4.8 in)
	Weight	8.1 kg (17.9 lbs.)
	Material	Aluminium
	Lens	Tempered glass front
	IP class	IP65
	Color options	White – RAL 9010
		Black – RAL 9004
		Custom color – any RAL
Installation	Mounting points	2 x two quarter-turn locking points for one or two Omega brackets
	Orientation	Any
	Rigging possibilities	Floor stand (included) or hanging (Omega clamps included)
	Safety features	Bottom mount for safety wire
		Minimum distance to combustible materials: 0.3 m (11 in.)
		Minimum distance to illuminated surfaces: 0.3 m (11 in.)
Thermal	Temperature range, Operating	–40° to +50°C (-40° to +122°F)
	Temperature range, Start-up	–20° to +50°C (-4° to +122°F)
	Temperature range, Storage	–40° to +80°C (-40° to +176°F)
	Humidity (max.)	98%
	Cooling	Active, forced air, temperature-regulated, low noise
Connections	DMX data in/out	IP65 Neutrik HD locking XLR 5-pin cable 0.5m, for DMX in and out
	Power	Power cable 1m with bare ends
Conforms to	UL Std. 1573	
	2014/35/EU: Low Voltage Directive	EN 60598-1, EN 60598-2-17, EN 62471, EN 60529
	2014/30/EU: EMC Directive	EN 55103-1, EN 55103-2, EN 55015, EN 61547, EN 61000-3-2, EN 61000-3-3
	RoHS2 Directive	2011/65/EU
Included items	Included items	Floor stand (incl. screws)
		2 pcs. Omega brackets
		Wireless DMX antenna
		User manual
Fixtures and accessories	Fixtures	Order no: 80030524 - Q-7 Color Flood, Std, BL
		Order no: 80030561 - Q-7 Color Flood, Std, WH
		Order no: 80030562 - Q-7 Color Flood, Std, CU
	Cables	Order no: 83062011 - SGM USB uploader cable
	Brackets	Order no: 83060603 - BCC-2 Dual bracket
		Order no: 83060604 - BCC-4 Quad bracket
		Order no: 83060602 - Omega bracket
	Floorstand	Order no: 83060610 - Floorstand for i, P, Q and X series with 1/4-turn fasteners
	Barndoor	Order no: 83061119 - Accessory holder i-5/P-5 Series
		Order no: 83061120 - Barndoor 4-way, i-5/P-5/X-5/Q-7 Series
		Order no: 83061121 - Barndoor 8-way, i-5, P-5, X-5 & Q-7 Series
		Order no: 83061122 - Color frame, i-5, P-5, X-5 & Q-7 Series
	Flightcase	Order no: 82051501 - Flightcase for 4 pcs. of i-5/P-5/Q-7/X-5
		Order no: 82051502 - Flightcase for 4 pcs. of i-5/P-5/Q-7/X-5 incl. barndoors

**Figures provided by manufacturer and obtained under manufacturer's test conditions*

***Goniometer Scan / SGM Illumination Lab 1.6.0.0*

BL = Black (RAL 9004)

WH = White (RAL 9010)

CU = Custom Color (Any RAL color)

Q•7 W
Specifications

Optics	Light source	1,000 x cool white LEDs (5,700K)
	LEDs expected lifetime	50,000 hours*
	Lens	110° fixed
Photometric	Light output	47,800 lm**
	Efficacy	105 lm/W
Features	Tilt	0 - 190°
	LED panel	Four individually controllable panels
Electrical	AC power	208 - 240 V nominal 50/60 Hz
	Maximum inrush current @ 240VAC	20A
	Maximum power consumption	485 W (all LEDs on)
	Typical power consumption	455 W (all LEDs on)
	Power factor	0.99 PF (230 V)
Programming and Control	Protocol	USITT DMX 512 A
		Wireless DMX (LumenRadio)
	Setting and addressing	RDM
		RFID
		OLED graphical display / 4 buttons
		Software upgradable with SGM USB uploader cable (P/N:83062011)
	Standalone mode	Quick color
		Up to 24 programmable scenes
		Standalone mode programmable by RFID
	DMX channels	1, 4, 6 or 8
Physical	Dimensions (L x H x W)	497 x 268 x 122 mm (19.6 x 10.6 x 4.8 in)
	Weight	8.1 kg (17.9 lbs.)
	Material	Aluminium
	Lens	Tempered glas front
	IP class	IP65
	Color options	White – RAL 9010
		Black – RAL 9004
		Custom color – any RAL
Installation	Mounting points	2 x two quarter-turn locking points for one or two Omega brackets
	Orientation	Any
	Rigging possibilities	Floor stand (included) or hanging (Omega clamps included)
	Safety features	Bottom mount for safety wire
		Minimum distance to combustible materials: 0.3 m (11 in.)
		Minimum distance to illuminated surfaces: 0.3 m (11 in.)
Thermal	Temperature range, Operating	–40° to +50°C (-40° to +122°F)
	Temperature range, Start-up	–20° to +50°C (-4° to +122°F)
	Temperature range, Storage	–40° to +80°C (-40° to +176°F)
	Humidity (max.)	98%
	Cooling	Active, forced air, temperature-regulated, low noise
Connections	DMX data in/out	IP65 Neutrik HD locking XLR 5-pin cable 0.5m, for DMX in and out
	Power	Power cable 1m with bare ends
Conforms to	UL Std. 1573	
	2014/35/EU: Low Voltage Directive	EN 60598-1, EN 60598-2-17, EN 62471, EN 60529
	2014/30/EU: EMC Directive	EN 55103-1, EN 55103-2, EN 55015, EN 61547, EN 61000-3-2, EN 61000-3-3
	RoHS2 Directive	2011/65/EU
Included items	Included items	Floor stand (incl. screws)
		2 pcs. Omega brackets
		Wireless DMX antenna
		User manual
Fixtures and accessories	Fixtures	Order no: 80030525 - Q-7 W Color Flood, Std, BL
		Order no: 80030563 - Q-7 W Color Flood, Std, WH
		Order no: 80030564 - Q-7 W Color Flood, Std, CU
	Cables	Order no: 83062011 - SGM USB uploader cable
	Brackets	Order no: 83060603 - BCC-2 Dual bracket
		Order no: 83060604 - BCC-4 Quad bracket
		Order no: 83060602 - Omega bracket
	Floorstand	Order no: 83060610 - Floorstand for i, P, Q and X series with 1/4-turn fasteners
	Barndoor	Order no: 83061119 - Accessory holder i-5 & P-5 Series
		Order no: 83061120 - Barndoor 4-way, i-5/P-5/X-5/Q-7 Series
		Order no: 83061121 - Barndoor 8-way, i-5/P-5/X-5/Q-7 Series
		Order no: 83061122 - Color frame, i-5/P-5/X-5/Q-7 Series
	Flightcase	Order no: 82051501 - Flightcase for 4 pcs. of i-5/P-5/Q-7/X-5
		Order no: 82051502 - Flightcase for 4 pcs. of i-5/P-5/Q-7/X-5 incl. barndoors

**Figures provided by manufacturer and obtained under manufacturer's test conditions*

***Goniometer Scan / SGM Illumination Lab 1.6.0.0*

BL = Black (RAL 9004)

WH = White (RAL 9010)

CU = Custom Color (Any RAL color)

CREATIVE
PIXELS

IP65 RoHS CE

The SixPack

The ultimate pixel blinder

The SixPack is a creative pixel fixture that can be rigged in numerous constellations for stunning designs.

The SixPack contains six individually addressable 40 W RGBA lamps creating a high output of 4,800 lumens. Each SixPack features a halogen emulation mode which is designed to mimic traditional halogen lamps. This mode creates a retro look and allows designers to add more flexibility to their designs.

The trapezoid design of the SixPack enables the fixture to be rigged into curved shapes, such as a speaker line array. When rigged together, SixPacks create a perfect low-resolution and extremely powerful video wall. Animated graphics can be laid over the display to create stunning high-powered images. This also makes it perfect for unique, creative installations while maintaining an easy rigging system for quick and safe setup and dismantling.

Unlike any other fixture, the SixPack's control features are placed on the rear for easy access on stage, which makes it suitable for placing in stage stairs and other locations only accessible from behind. With an IP65-rating, the SixPack is also ideal for use in any outdoor environment, for example for lighting up building facades.

Features

- Cutting-edge, high-performance LED product
- 6 high-power 40 W RGBA LEDs
- User-friendly setup via simple control buttons and OLED display
- Configuration via RFID from smartphone
- Numerous mounting options and simple positioning
- Halogen emulation mode
- Suitable for pixel mapping
- Lightweight and aesthetic Danish design
- High output, low consumption
- Small footprint
- Suitable for multiple applications
- IP65-rated
- Practically maintenance-free

High applicability

- Monuments and attractions
- Architectural buildings
- Shopping centers and retail
- Indoor/outdoor applications
- TV shows
- Staging
- Rental
- Touring
- Clubs

Dimensions

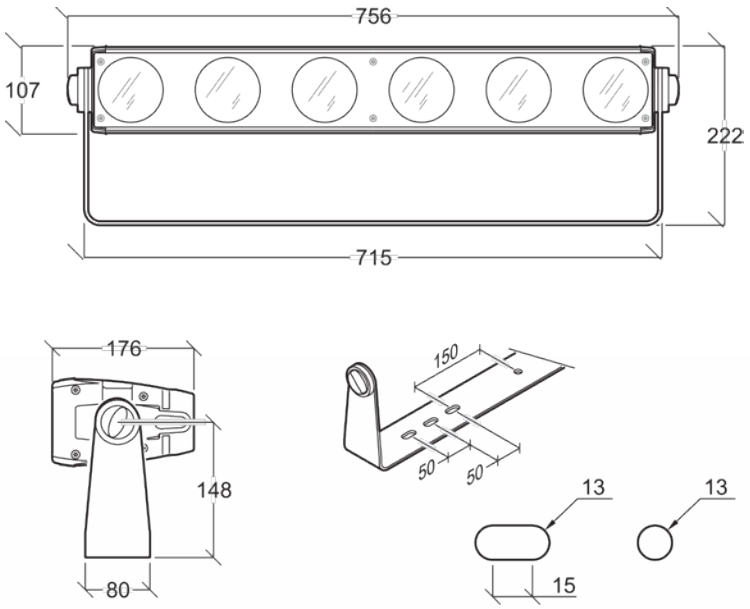

Connection diagram

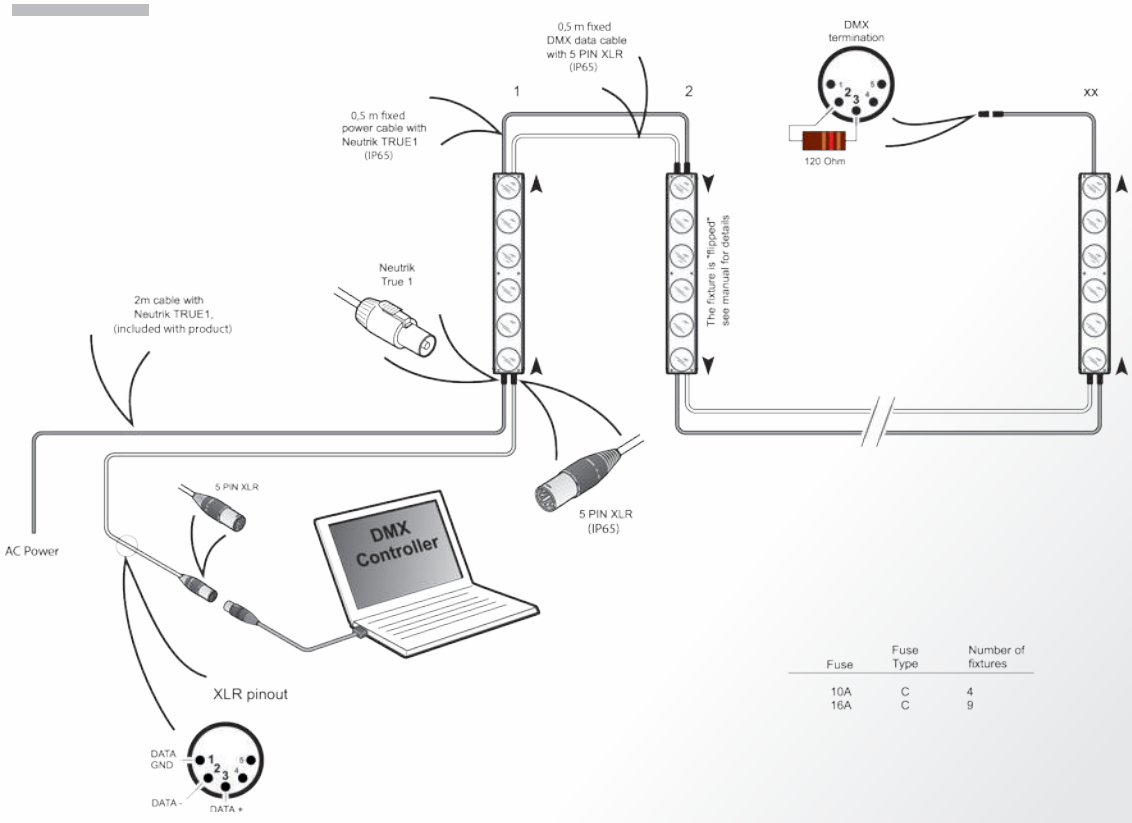

Fuse	Fuse Type	Number of fixtures
10A	C	4
16A	C	9

Beam angle

Beam angle: 13°

LUX diagram All on

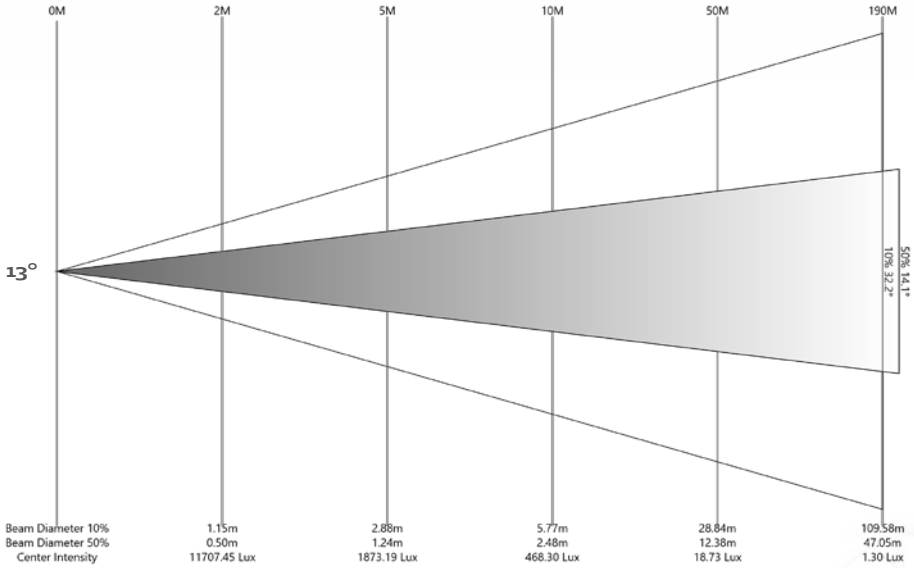

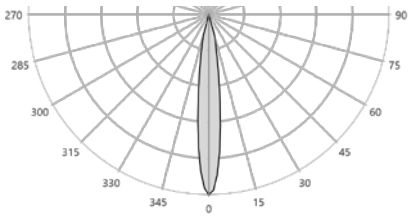

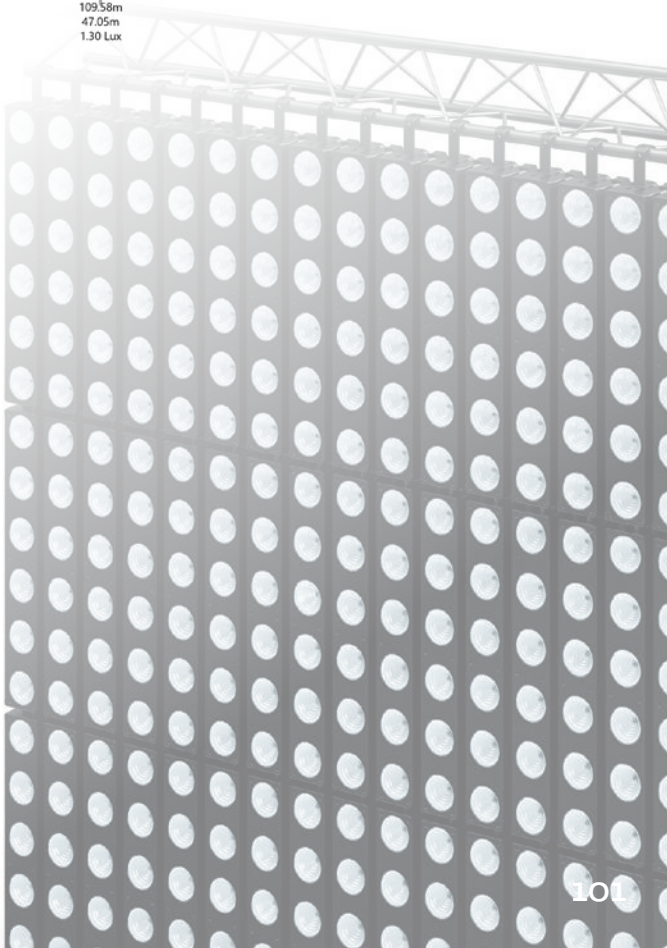

SixPack
Specifications

Optics	Light source	6 x 40W RGBA LEDs
	LEDs expected lifetime	50,000 hours*
	Lens	13° fixed
	Pixel pitch	120mm
Photometric	Light output	4,800 lm (all LEDs on)**
	Color temperature range	2,000K - 10,000K
	Efficacy	20 lm/W
Features	Pan / Tilt	0° / 110°
	LED panel	Six individually controllable cells
	Others	Tungsten response emulation
Electrical	AC power	100 - 240 V nominal 50/60 Hz
	Maximum power consumption	250W (all LEDs on)
	Typical power consumption	250W (all LEDs on)
	Power factor	0.97 PF (230 V)
Programming and control	Protocol	USITT DMX 512
	Setting and addressing	RDM
		RFID
		OLED graphical display / 4 buttons
		Software upgradable with SGM USB uploader cable (P/N:83062011)
		CTC and white balance control (WB)
	Stand alone mode	Quick color
		Up to 24 programmable scenes
	DMX channels	6, 7, 18, 22, 24, 28, 48, 53
Physical	Dimensions (L x H x W)	750 x 107 x 175 mm (29.5 x 4.2 x 6.9 in)
	Weight	11 kg (24.2 lbs.)
	Material	Aluminium
	Lens	PE and tempered glass front
	IP class	IP65
Installation	Orientation	Any
	Maximum units vertical	8 pcs.
	Rigging possibilities	Single hanging / standing bracket, matrix hanging mounts
	Safety features	Mount for safety wire
		Minimum distance to combustible materials: 0.3 m (11 in.)
		Minimum distance to illuminated surfaces: 0.3 m (11 in.)
Thermal	Temperature range, Operating	−40° to +50°C (-40° to +122°F)
	Temperature range, Start-up	−20° to +50°C (-4° to +122°F)
	Temperature range, Storage	−40° to +80°C (-40° to +176°F)
	Humidity (max.)	98%
	Cooling	Passive
Connections	Power	Neutrik Powercon True1 inlet and link-thru
	DMX data in/out	Waterproof Neutrik Locking 5 pin XLR for DMX
Certified to Conforms to	CSA Std. C22.2 No. 166 UL Std. 1573	
	2014/35/EU: Low Voltage Directive	EN 60598-1, EN 60598-2-17, EN 62471, EN 60529
	2014/30/EU: EMC Directive	EN 55103-1, EN 55103-2, EN 55015, EN 61547, EN 61000-3-2, EN 61000-3-3
	RoHS2 Directive	2011/65/EU
Included items	Included items	U-Bracket
		Vertical mounting bracket
		2m power cable with Neutrik TRUE1
		User Manual
Fixtures and accessories	Fixtures	Order no: 80030505 - SixPack Wash, Std, BL
	Brackets	Order no: 83060606 - SixPack Horizontal bracket
		Order no: 83060611 - SixPack Hanger bracket set
	Cables	Order no: 07860040 - 2 m power cable with Neutrik TRUE1
		Order no: 83062011 - SGM USB uploader cable

**Figures provided by manufacturer and obtained under manufacturer's test conditions*

***Goniometer Scan / SGM Illumination Lab 1.6.0.0*

BL = Black (RAL 9004)

WH = White (RAL 9010)

CU = Custom Color (Any RAL color)

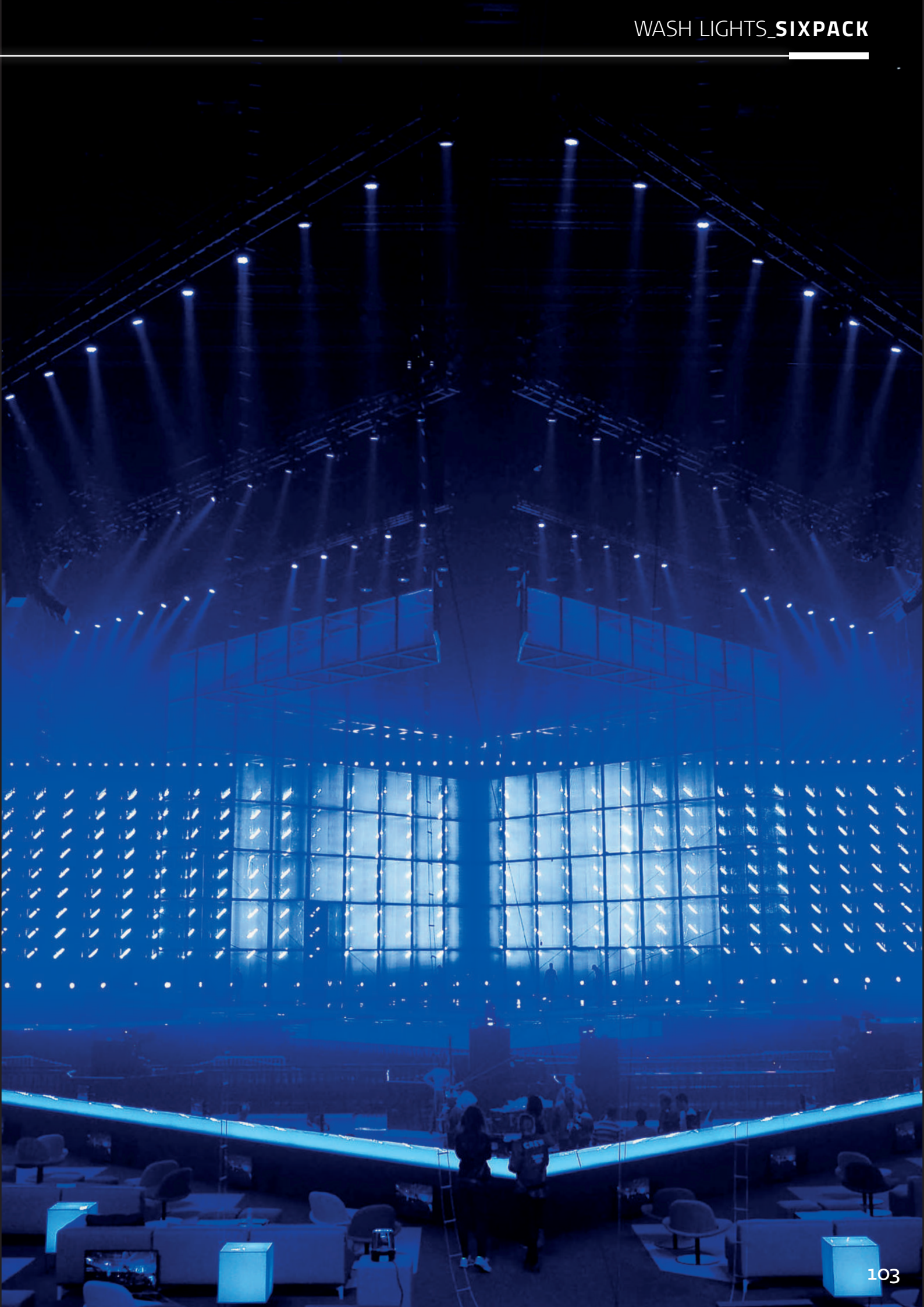

EFFEC
LIGH

CT TING

LT•100/200
LB•100
LD•5
LP•700

EFFECT
LIGHTING

The LT-100 & LT-200

3D LED Graphic Tube

The LT Series comprises of 1 and 2-meter long graphic tubes, loaded with RGB LEDs with a 35 mm pixel pitch – all DMX-controllable via any proprietary media server or pixel mapping DMX console.

These LED graphic tubes can be suspended from the ceiling to provide staggering overhead graphic effects. However, it is also suitable for floor-mounting and creative installations.

The theory of 3D pixel mapping is that two-dimensional objects are transformed into three-dimensions with the help of advanced programming techniques; thus each pixel can be addressed individually, enabling the designer to create genuine 3D lighting effects, such as 3D waves or 3D bars which can be easily manipulated in terms of speed, color, brightness and direction.

The system can be controlled via DMX as well as with a dedicated video server or ordinary PC with Art-Net (the Art-Net signal can then be distributed by the A-4 Art-Net to DMX converter).

Features

- 27/54 double-sided RGB LEDs
- The ability to display 3D effects
- The flexibility in direction of mounting
- Weighs only 330/560 g
- A comprehensive viewing angle (2 x 130°)
- IP65-rated

High applicability

- TV scenography
- Exhibitions
- Clubs
- Theatrical
- Staging
- Decoration
- Just about any installation

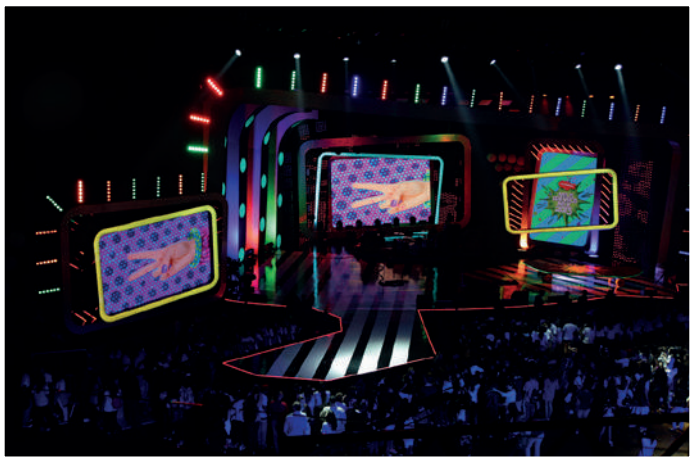

MASSIVE VISUAL IMPACT FOR
'KONGSTED IN KONCERT'

Photo: Morten Rygaard

Dimensions

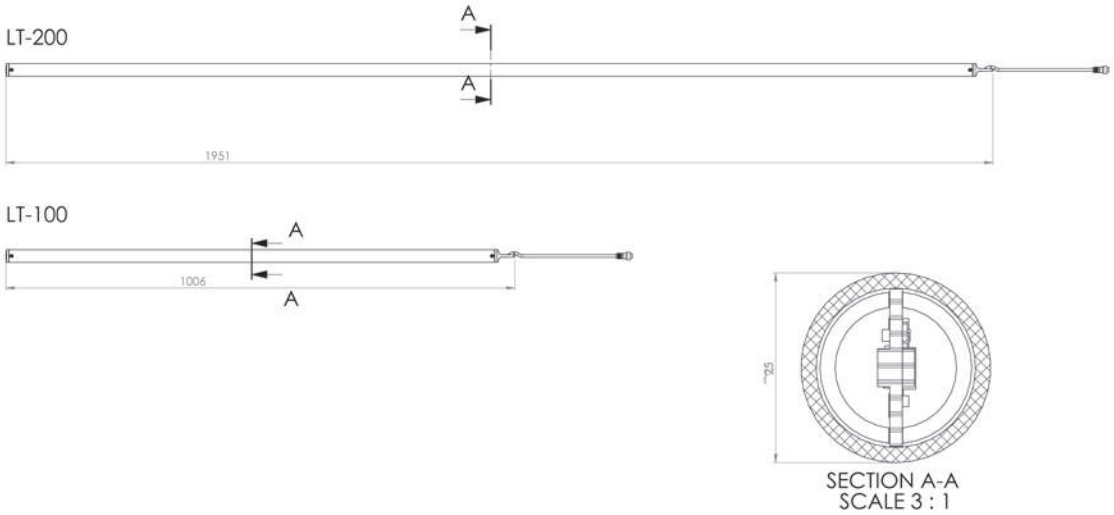

Connection Diagram

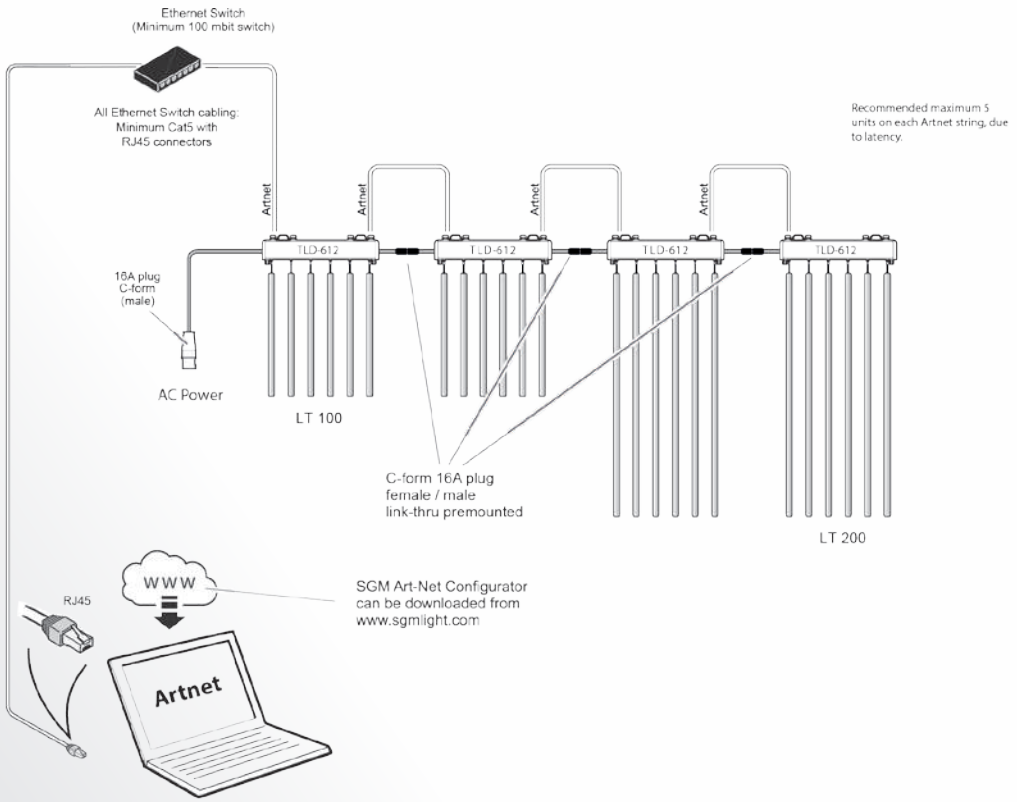

LT•100 & LT•200
Specifications

		LT-100	LT-200
Optics	Light source	27 x 2 RGB LEDs	54 x 2 RGB LEDs
	LEDs expected lifetime	50,000 hours*	50,000 hours*
	Pixel pitch	35mm	35mm
Photometric	Light output	510 lm	1,020 lm
	Efficacy	25 lm/W	25 lm/W
Features	Viewing angle	2 x 130°	2 x 130°
	Addressable pixels	27	54
Electrical	DC power	12V ±0.2V	12V ±0.2V
	Typical power consumption	20W (all LEDs on)	40W (all LEDs on)
Programming and control	Protocol	USITT DMX 512 A	USITT DMX 512 A
	Drivers	Driven by TLD-612 / TLD-612 A / ILD	Driven by TLD-612 / TLD-612 A / ILD
	DMX channels	81	162
Physical	Dimensions (L x D)	1,006 x 27 mm	1,951 x 27 mm
	Weight	330 g	560 g
	Material	Acryllic and aluminium	Acryllic and aluminium
	Lens	Standard lens, acryllic tube	Standard lens, acryllic tube
	IP class	IP65	IP65
Installation	Orientation	Any	Any
	Rigging possibilities	Top bracket for hanging	Top bracket for hanging
	Safety features	Possibility for safety wire thru top bracket	Possibility for safety wire thru top bracket
Thermal	Temperature range, Operating	−40° to +50°C (-40° to +122°F)	−40° to +50°C (-40° to +122°F)
	Temperature range, Start-up	−20° to +50°C (-4° to +122°F)	−20° to +50°C (-4° to +122°F)
	Temperature range, Storage	−40° to +80°C (-40° to +176°F)	−40° to +80°C (-40° to +176°F)
	Humidity (max.)	98%	98%
	Cooling	Passive	Passive
Connections	Data input	Female locking 4-pin RS-765	Female locking 4-pin RS-765
Certification	2004/108/EC: EMC Directive	EN 55022, EN 61000-6-3, EN 55024, EN 61547	EN 55022, EN 61000-6-3, EN 55024, EN 61547
Included items	Included items	User manual	User manual
Fixtures and accessories	Fixtures	Order no: 80080015 - LT-100 IP - Led tube 1m (27 pixels)	Order no: 80080014 - LT-200 IP - Led tube 2m (54 pixels)
	Drivers	Order no: 80070201 - TLD-612 Touring LED driver	Order no: 80070201 - TLD-612 Touring LED driver
		Order no: 80070221 - TLD-612 A Touring LED driver	Order no: 80070221 - TLD-612 A Touring LED driver
		Order no: 80070216 - ILD installation LED driver ArtNet	Order no: 80070216 - ILD installation LED driver ArtNet
	Accessories	Order no: 80070217 - A-4 ART-NET to DMX Converter	Order no: 80070217 - A-4 ART-NET to DMX Converter
		Order no: 83060203 - LT mount (6 pcs.)	Order no: 83060203 - LT mount (6 pcs.)
		Order no: 07860036 - 0,85m extension cable	Order no: 07860036 - 0,85m extension cable
		Order no: 07860039 - 1,5m extension cable	Order no: 07860039 - 1,5m extension cable
		Order no: 07860094 - 2m extension cable	Order no: 07860094 - 2m extension cable
		Order no: 07860035 - 3m extension cable	Order no: 07860035 - 3m extension cable
		Order no: 07860038 - 5m extension cable	Order no: 07860038 - 5m extension cable

**Figures provided by manufacturer and obtained under manufacturer's test conditions*

The LB-100

IP65-rated LED Balls

LB-100 LED balls are designed to form a video light curtain with 120 mm pixel pitch.

The curtain is made up of 0.85-meter long strings, each containing seven 28 mm RGB LED balls, with two powerful RGB LEDs (rated at 42mW per pixel) built into the white plastic moulding. These can extend to a maximum length of 6.8 meters (using 56 balls), and a total power consumption of just 42 W.

These semi-transparent IP65-rated LED Balls are viewable from 360° and can be used to create alluring 3D spatial effects.

The system can be controlled via DMX as well as with a dedicated video server or ordinary PC with Art-Net (the Art-Net signal can then be distributed by the A-4 Art-Net to DMX converter).

Features

- 7x28 mm RGB LED balls
- The ability to display 3D effects
- The flexibility in direction of mounting
- Can be extended up to 6,8 m
- Weighs only 141 g
- 360° viewing angle
- IP65-rated

High applicability

- TV scenography
- Theme parks
- Exhibitions
- Video art
- Clubs
- Shopping malls
- Just about any installation

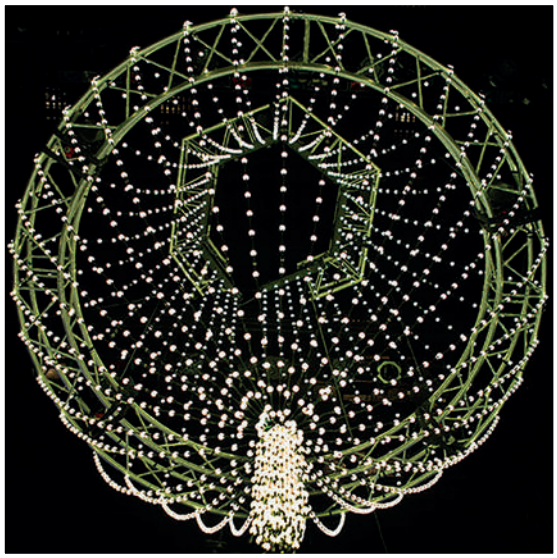

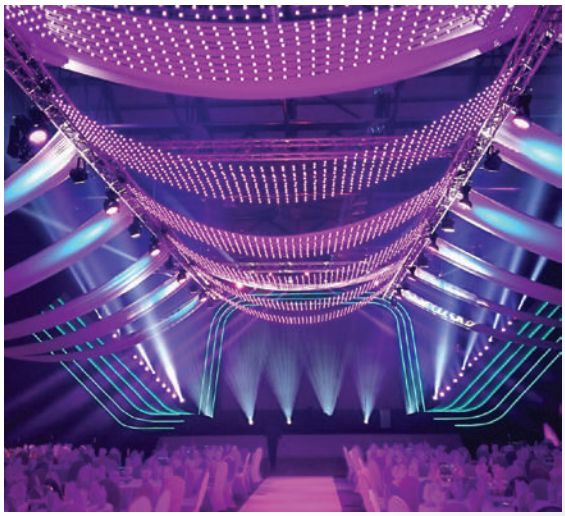

Dimensions

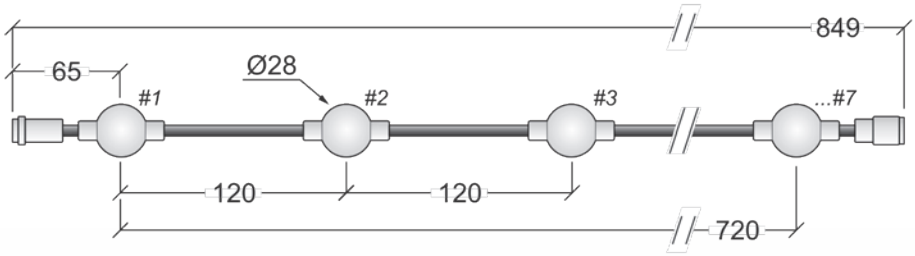

Connection diagram

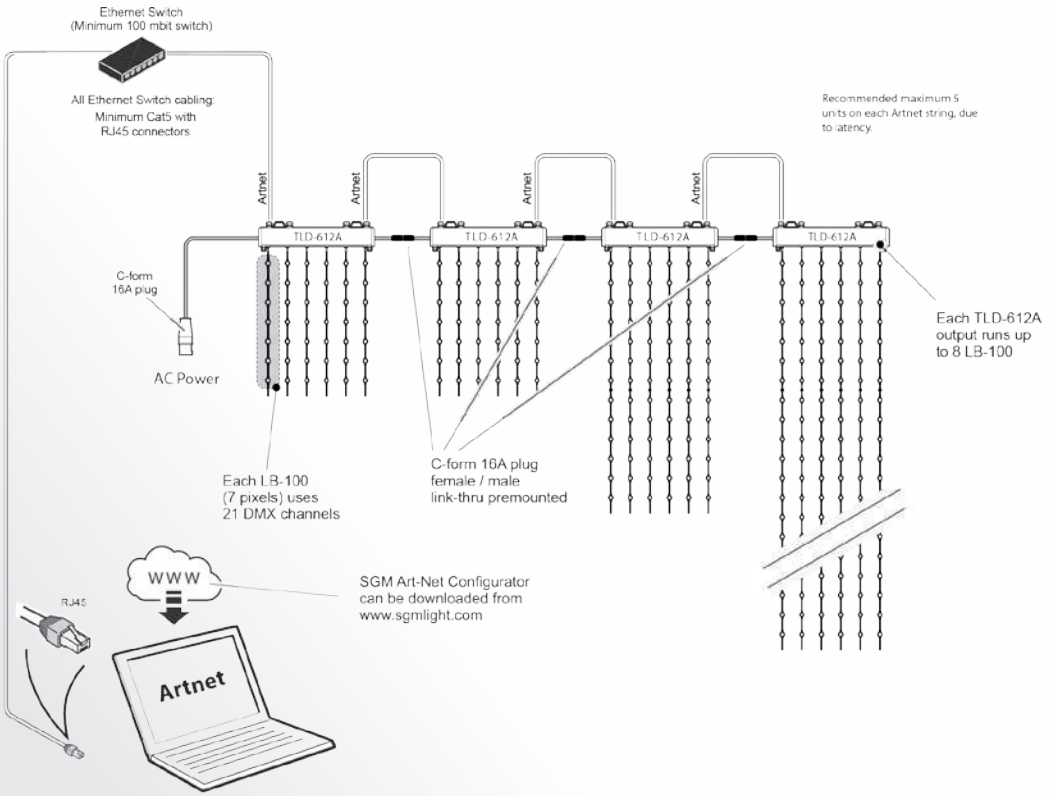

LB•100
Specifications

Optics	Light source	7 x 2W RGB LEDs
	LEDs expected lifetime	50,000 hours*
	Pixel pitch	120mm (4.724 in)
Photometric	Light output	77 lm
	Efficacy	1.3 lm/W
Features	Viewing angle	360°
	Others	Can be extended to form a string of maximum up to 6.8 meters
Electrical	DC power	12V ±0.2V
	Typical power consumption	7.4W (7 pixels)
Programming and control	Protocol	USITT DMX 512 A
	Drivers	Driven by TLD-612 / TLD-612 A / ILD
	DMX channels	21 channels pr. String of 7 pixels
Physical	Dimensions (L x D)	850 x 28 mm (33.46 x 1.1 in)
	Weight	141 g (0.31 lbs.)
	Material	Silicone rubber
	Lens	Silicone rubber encasement
	IP class	IP65
Installation	Orientation	Any
	Rigging possibilities	Mounting by 4-pin RS-765 connector
Thermal	Temperature range, Operating	–40° to +50°C (-40° to +122°F)
	Temperature range, Start-up	–20° to +50°C (-4° to +122°F)
	Temperature range, Storage	–40° to +80°C (-40° to +176°F)
	Humidity (max.)	98%
	Cooling	Passive
Connections	Data input	Female locking 4-pin RS-765
	Data output	Male locking 4-pin RS-765
Certification	2004/108/EC: EMC Directive	EN 55022, EN 61000-6-3, EN 55024, EN 61547
Included items	Included items	LB-100 LED Ball, 0.85mtr. (7 pixels)
Fixtures and accessories	Fixtures	Order no: 80080001 - LB-100 LED Ball, 0.85mtr (7 pixels)
	Drivers	Order no: 80070201 - TLD-612 Touring LED driver
		Order no: 80070221 - TLD-612 A Touring LED driver
		Order no: 80070216 - ILD installation LED driver ArtNet

**Figures provided by manufacturer and obtained under manufacturer's test conditions*

The LP-700

LED Pixels

Creative display of graphics and video content.

The LP-700 comes in chain lenghts of 6.75 m. With a pixel pitch of 120 mm, and individual pixels measuring 40 x 40 x 17 mm (L x W x H), each chain length has 56 addressable pixels. The power consumption of each pixel chain is just 62 W.

Installable in any orientation, it is IP44-rated and has a maximum ambient operating temperature of 50°C and minimum of -40°C. The signal source is DMX512 A (with 168 controllable DMX channels).

The LP-700 offers the flexibility of adjusting pixel pitch through spacers (60, 80, 100, 120 mm).

Features

- 56 individually addressable RGB LED pixels
- The ability to display creative video content
- Length 6.75 m
- Adjustable pixel pitch through spacers (60, 80, 100, 120)

High applicability

- TV scenography
- Theme parks
- Exhibitions
- Video art
- Clubs
- Shopping malls
- Just about any installation

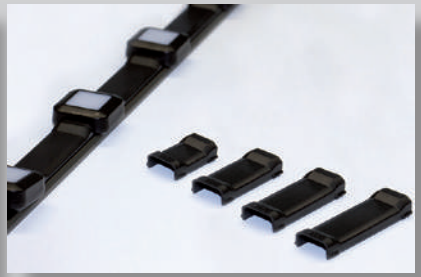

Dimensions

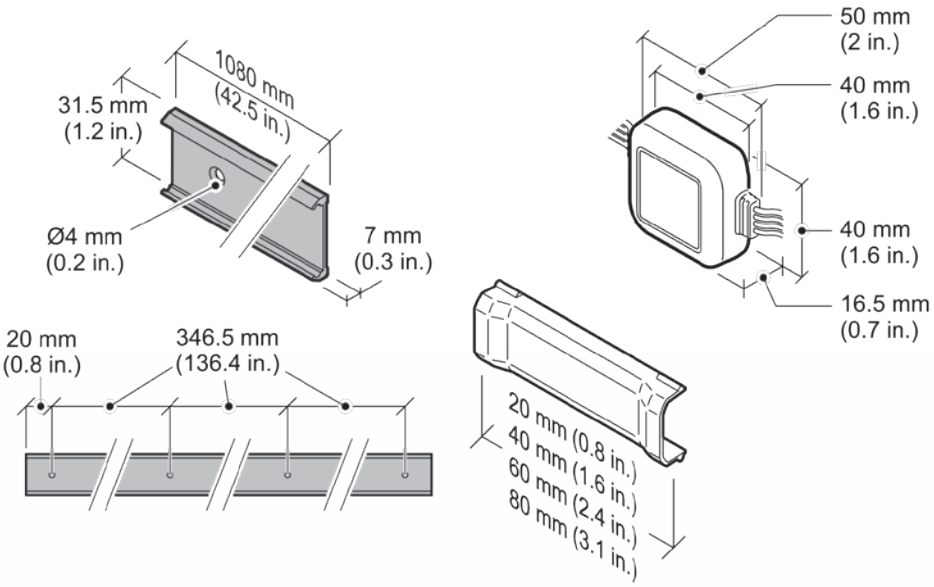

Connection diagram

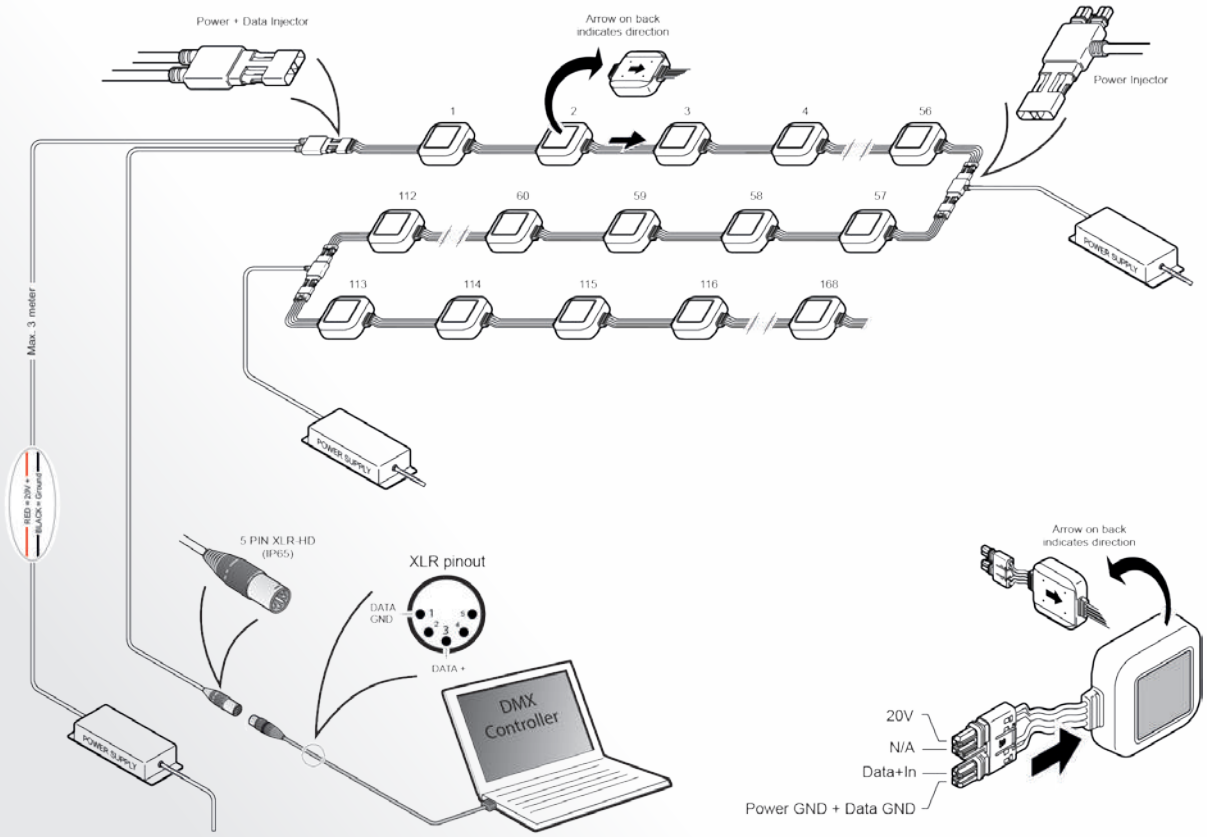

LP•700
Specifications

Optics	Light source	56 x 4 RGB LEDs
	LEDs expected lifetime	50,000 hours*
	Pixel pitch	60, 80, 100, 120 mm (standard)
Photometric	Light output	1,008 lm
	Efficacy	15 lm/W
Features	Viewing angle	110°
Electrical	DC power	20V ±0.5 V
	Typical power consumption	62W (56 pixels)
Programming and control	Protocol	USITT DMX 512 A
	DMX channels	168
Physical	Dimensions (L x H x W)	40 x 40 x 17 mm
	Weight	1.2 kg (2.65 lbs.)
	Material	High-pressure injection moulded plastic
	Lens	Moulded frosted lens
	IP class	IP44
Installation	Orientation	Any
	Rigging possibilities	Mounting in aluminium rail
Thermal	Temperature range, Operating	−40° to +50°C (-40° to +122°F)
	Temperature range, Start-up	−20° to +50°C (-4° to +122°F)
	Temperature range, Storage	−40° to +80°C (-40° to +176°F)
	Humidity (max.)	98%
	Cooling	Passive
Connections	Data / power input	Waterproof connector plug TE 2106135-4
	Data / power output	Waterproof connector receptacle TE 2106136-4
Certification	2004/108/EC: EMC Directive	EN 55022, EN 61000-6-3, EN55024, EN 61547
Included items	Included items	LP-700 sold in boxes of 4 pcs. 56 pcs pixel spacer 120mm (Standard) 4 pcs. end caps User manual
Fixtures and accessories	Fixtures	Order no: 80080006 - LP-700 Black, P120 Order no: 83061106 - Pixel spacer P100 Black Order no: 83061105 - Pixel spacer P80 Black Order no: 83061101 - Pixel spacer P60 Black Order no: 83061145 - Pixel spacer P120 Black
	Drivers	Order no: 83061701 - LP-700, Power supply (1 pcs.) Order no: 83062008 - LP-700, Power injector Order no: 83062042 - LP-700, Power + Data DL-1 Injector cable

**Figures provided by manufacturer and obtained under manufacturer's test conditions*

The LD-5

LED Dome

LED domes that can be used in any creative constellation.

The LD-5 offers powerful effects combined with a small physical footprint. Its broad viewing angle of 180° makes a great impact in many types of installations, including outdoor installations, as the front of the product is IP65-rated.

The outer diameter is just 80 mm (ceiling cut-out diameter of 70 mm), with a total depth of 53.3 mm (depth below ceiling of 35 mm).

The LED domes can function in maximum ambient temperature of 50°C and minimum of -40° C, and are configurable via three-channel DMX.

Features

- Powerful effects combined with a small physical footprint
- Broad viewing angle of 180°
- The ability to display creative video content
- IP65-rated (front)

High applicability

- TV scenography
- Theme parks
- Exhibitions
- Video art
- Clubs
- Shopping malls

Dimensions

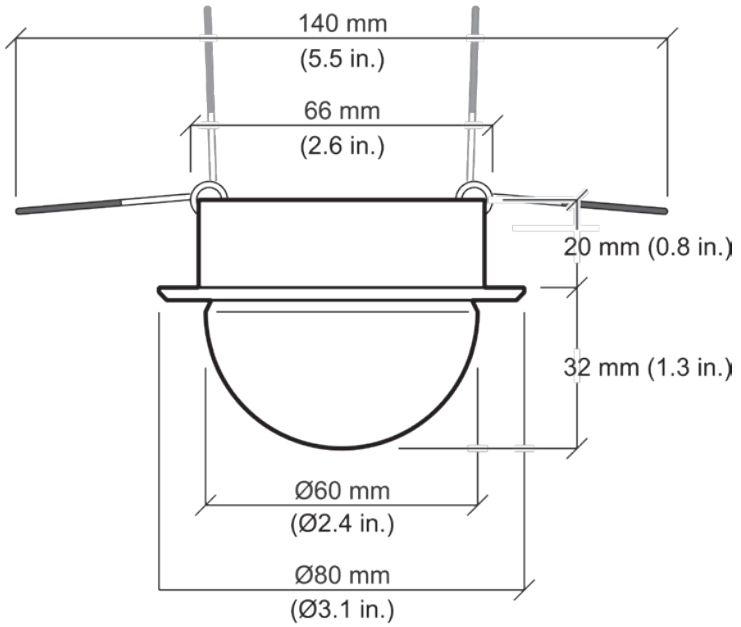

Connection diagram

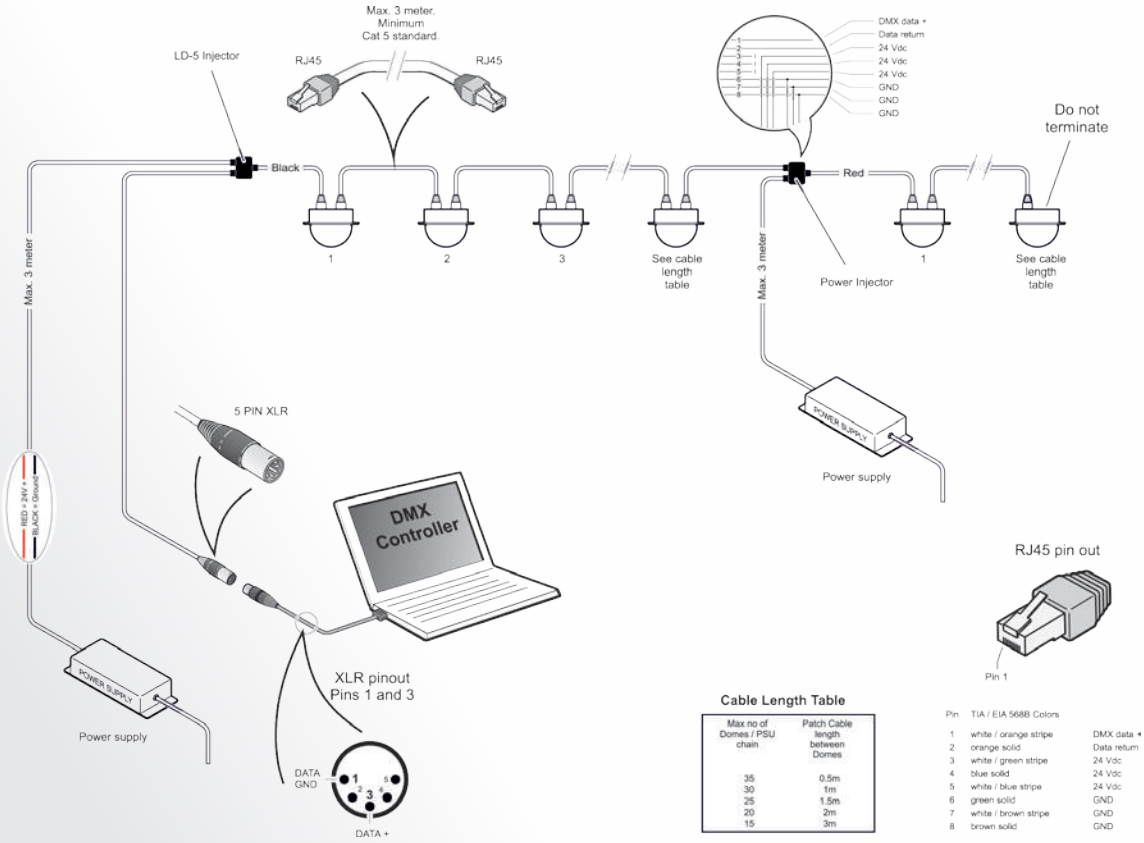

Cable Length Table

Max no of Domes / PSU chain	Patch Cable length between Domes
35	0.5m
30	1m
25	1.5m
20	2m
15	3m

Pin	TIA / EIA 568B Colors	
1	white / orange stripe	DMX data +
2	orange solid	Data return
3	white / green stripe	24 Vdc
4	blue solid	24 Vdc
5	white / blue stripe	24 Vdc
6	green solid	GND
7	white / brown stripe	GND
8	brown solid	GND

LD•5
Specifications

Output	Light source	4 x RGB SMD LEDs
	Viewing angle	180°
	Lumen maintenance	50,000 hours*
Electrical	Power	24 V +/– 0.5 V
	Typical power consumption	1.5W
Controls	Controls	USITT DMX512 A
Physical	Weight	82 g (0.18 lbs.)
	Material	Aluminium body with translucent plastic dome cover
	Lens	Translucent plastic dome
	connections	Data input RJ45, Data output RJ45
	Rigging possibilities	Flush mount
	Mounting	Any orientation in ø66 - ø80 hole, maximum 20mm depth
	Dimensions (L x W x H)	80x80x52 mm (3.14x3.14x2.04 in.)
Thermal	Temperature range, Operating	–40° to +50°C (-40° to +122°F)
	Temperature range, Start-up	–20° to +50°C (-4° to +122°F)
	Temperature range, Storage	–40° to +80°C (-40° to +176°F)
	Humidity (max.)	98%
	IP class	IP65 (front of product), IP 20 (back of product)
	Cooling	Passive
Certification	EU Safety	EN 60598-2-17 (EN20698-1), EN 62471
	EU EMC	EN 55 015, EN 55 103-1
Fixtures and accessories	Fixtures	Order no: 80080005 - LD-5 LED Dome
	Accessories	Order no: 83061702 - LD-5 Power supply unit
		Order no: 83062043 - LD-5, Power + Data DL-1 injector cable
		Order no: 83062010 - LD-5 Power injector

**Figures provided by manufacturer and obtained under manufacturer's test conditions*

RAIL
LIGH

TS

R•2 RGBW

R•2 W, 3000K

R•2 W, 4000K

RAIL
LIGHTS

RAIL LIGHT
REVOLUTION

RoHS

R-2 RGBW
R-2 W, 3000K
R-2 W, 4000K

LED Rail Lights

Intelligent LED rail lights for creating dynamic and vibrant scenes.

With the introduction of the innovative R-2 LED rail light series, SGM has revolutionized the concept of rail lights. The R-2 rail lights give the user full control and offer a unique user experience. It is possible to control the entire lighting setup via wireless DMX. This means that dimming the light up and down to change the mood, changing the color settings or even adjusting it according to the season of the year can be carried out in an instant – even from a distance. Automatically programmed schedules or alterations can all be done manually, providing endless possibilities.

The track adapter system makes the R-2 rail lights ideal for retrofitting an entire setup in the most commonly used tracks in a few easy steps.

R-2 comes in different beam angles, depending on type and configuration, to fulfill the requirements of most applications. They can be set to day, eco or night-time mode depending on needs for different styles of lighting in different situations and during different times of the day.

With the free application software C-5 Wireless DMX Controller developed by SGM, it is now possible to set up different pre-scheduled and customized modes to fit specific needs (read more on the next page).

Features

- Full user control
- Endless possibilities to create dynamic and vibrant environments
- Preset programs and make alterations from the free SGM C-5 software
- Easy retrofitting
- Weighs only 1 kg/2.2 lbs

High applicability

- Shop environments
- Museums
- Exhibitions
- Malls
- Halls
- Trade shows
- Clubs

C•5 Wireless DMX Controller

The C-5 Wireless DMX Controller is a uniquely developed piece of software intended for Windows tablets, offering the user a variety of control and programming possibilities related to the R-2 rail lights.

This tool enables you to pre-program lighting sequences and modes and to control the luminaires remotely via wireless DMX from LumenRadio. Examples include alternation in light setting by the hour, day, week or month, as well as seasonal light settings, day vs. night settings, division of fixtures into groups, ensuring uniform branding of retail shops globally.

All preferred modes can be pre-scheduled so that you do not have to worry about turning the system on and off manually. If needed, you can also make alterations manually to create e.g. sudden changes from the regular pre-scheduled program. All of this can all be done remotely.

Download the software from sgmlight.com

R•2
Dimensions

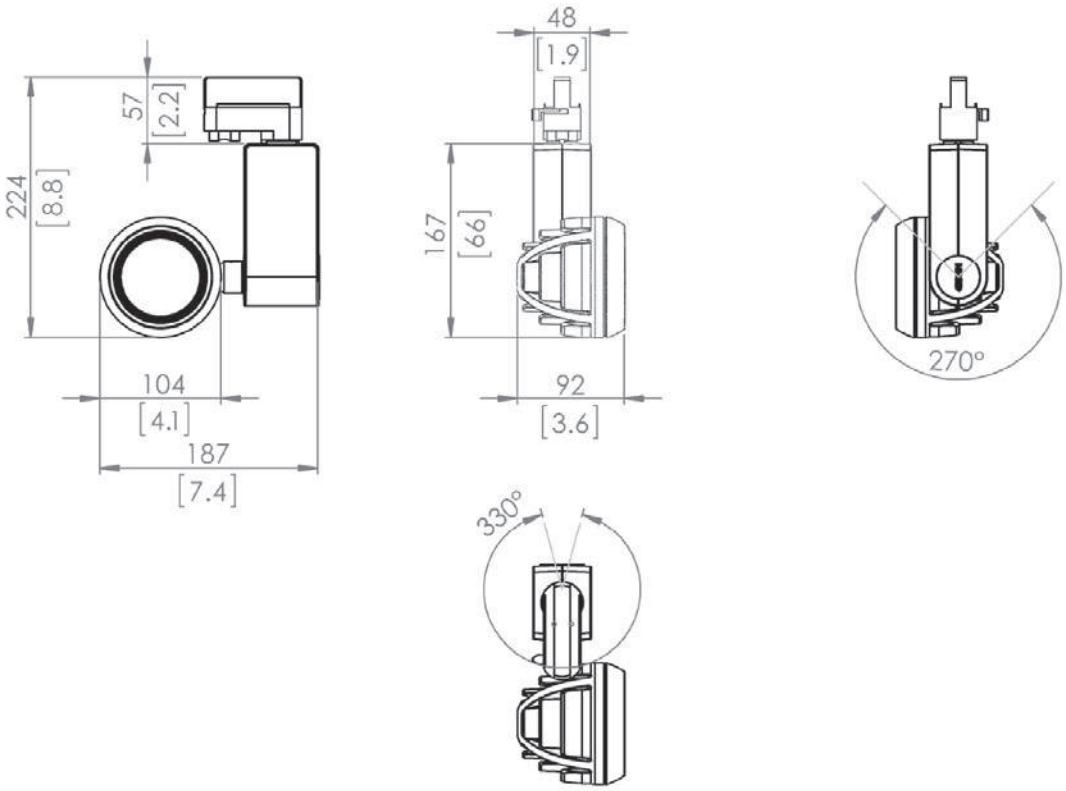

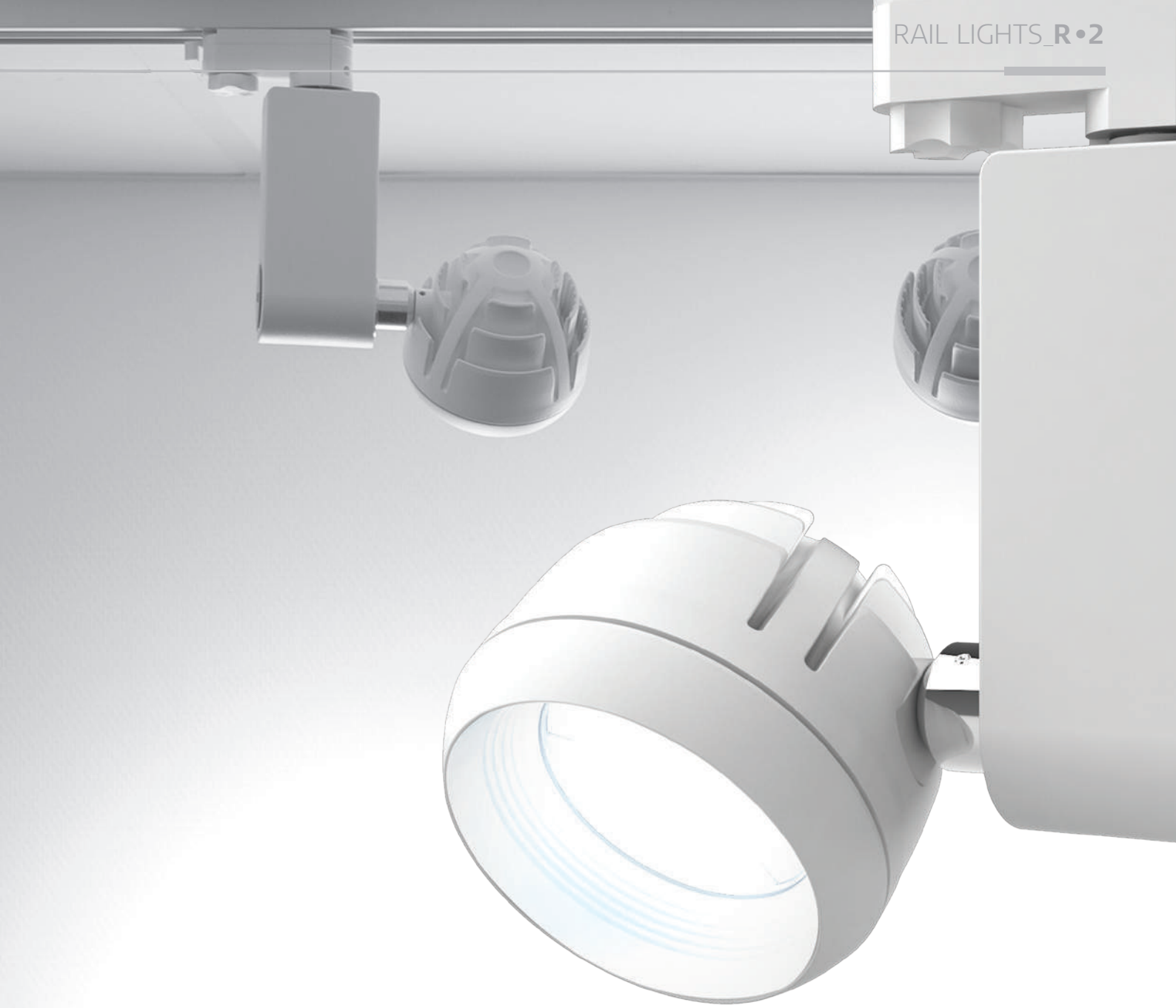

R•2
Specifications

Optics	Light source	RGBW / 3000K / 4000K
	LEDs expected lifetime	50,000 hours*
	Interchangable lens option	RBGW: 13°/35°, 3000K: 25°/35°, 4000K: 25°/35°
Photometric	Light output	RGBW: 800 lm
		3000K: 2,600 lm
		4000K: 2,600 lm
	Optical efficacy	RGBW: 22 lm/W
		3000K: 93 lm/W
		4000K: 79 lm/W
	CRI	3000K/4000K: >80
Features	Pan / tilt	330° / 270°
Electrical	AC power nominal	100 - 240 V 50/60 Hz
	AC power max rating	90-264V 50/60Hz
	Maximum power consumption	RBGW: 42W (all LEDs on), 3000K: 32W, 4000K: 35W
	Typical power consumption	RBGW: 37W (all LEDs on), 3000K: 28W, 4000K: 33W
	Power factor	0.90 PF (230 V)
Programming and control	Protocol	CRMX, W-DMX™ G2, W-DMX™ G3, W-DMX™ G4, W-DMX™ G4S
	Setting and addressing	Wireless DMX (LumenRadio)
		Software upgradable via wireless
	DMX channel	RBGW: 3, 3000K: 1, 4000K: 1
Physical	Dimensions (L x W)	224 x 187 mm (8,8 x 7,4 in)
	Spot diameter	Ø 104 mm (4,1 in)
	Weight	1 kg (2,2 lbs.)
	Material	Aluminium, stainless steel, ABS
	Lens	PMMA
	IP class	IP20
Installation	Mounting	3-circuit track system
	Compatibility	Staff, Norlux, Global, Nuco and Nordic
	Orientation	Any
Thermal	Temperature range, Operating	–10° to +40°C (–14° to +104°F)
	Humidity (max.)	95%
	Cooling	Passive cooling
Connections	Power	Track mount adapter
	DMX	Wireless (LumenRadio)
Conforms to	2006/95/EC: Low Voltage Directive	EN 60598-1, EN 60598-2-1, EN 60598-2-17, EN 62471
	1999/5/EC: R&TTE Directive	EN301489-1, EN301489-3, EN300328
	RoHS2 Directive	2011/65/EU
Included items	Included items	User manual
Fixtures and accessories	Fixtures	Order no: 84010103 - R-2 RGBW, white, 13 deg
		Order no: 84010104 - R-2 RGBW, black, 13 deg
		Order no: 84010119 - R-2 RGBW, white, 35 deg
		Order no: 84010120 - R-2 RGBW, black, 35 deg
		Order no: 84010101 - R-2 W, 3000K, white, 25 deg
		Order no: 84010102 - R-2 W, 3000K, black, 25 deg
		Order no: 84010109 - R-2 W, 4000K, white, 25 deg
		Order no: 84010110 - R-2 W, 4000K, black, 25 deg
	Accessories	Order no: 83062011 - SGM USB uploader cable
		Order no: 80070229 - LumenRadio CRMX transmitter (DMX only)

**Figures provided by manufacturer and obtained under manufacturer's test conditions*

***Goniometer Scan / SGM Illumination Lab 1.6.0.0*

POI

PERMANENT

OUTDOOR INS

G•Spot POI

G•Profile POI

G•Wash POI

G•1 Beam POI

G•1 Wash POI

i•2 POI series

i•5 POI series

STALLATION

P·2 POI

P·5 POI series

Q·2 POI series

Q·7 POI series

POI
POI

G-Spot POI

G-Profile POI

G-Wash POI

G-1 Beam POI

G-1 Wash POI

i-2 POI

i-5 POI

P-2 POI

P-5 POI

P-5 W POI

P-5 TW POI

Q-2 POI

Q-2 W POI

Q-7 POI

Q-7 W POI

WEATHER-
RESISTANT

IP66 RoHS

The POIs

Permanent Outdoor Installation

SGM's new range of weather-resistant lighting fixtures for permanent outdoor installation.

The POIs are based on the familiar standard fixtures with the same optical performance and electrical components, but optimized for permanent outdoor installations. Engineered to endure even the most extreme weather conditions, the POIs take on rainy days, icy winters, dusty winds, extreme heat and salty sprays of seawater – eliminating the need to shield off the fixtures to protect them from the elements.

All POI fixtures are configured via RDM, IP66-rated, maintenance-free and come standard with a 5-year warranty. A patented dehumidification processor eliminates condensation, which prevents corrosion and ultimately prolongs the lifespan of the electronic components. This technology makes SGM the only true manufacturer of permanent outdoor LED installation products.

With the A-4 Art-Net to DMX converter, the POI fixtures become remotely accessible, allowing you to program your show, upload and schedule it from a remote location. If connected to the internet, it works as a remote monitoring device to notify the service provider of any irregularities within the fixtures.

Customization is part of the POI philosophy. The POI fixtures are available in white and black, as well as an array of custom RAL colors, to accommodate the requirements and high aesthetic standards of architects and designers.

Features

IP66

G·Spot POI

LED Moving Head

- Stunning gobo pattern projections
- No accumulation of dust and externally induced impact on internal optics, gobos and light source unit
- High-power RGBY LED light source
- 8°- 43° adjustable beam angle
- Excellent performance in any conditions

G·Profile POI

LED Moving Head

- Advanced and adjustable framing shutters
- No accumulation of dust and externally induced impact on internal optics, gobos and light source unit
- High-power RGBY LED light source
- 8°- 43° adjustable beam angle
- Excellent performance in any conditions

G·Wash POI

LED Moving Head

- Velvety smooth wash effects
- No accumulation of dust and externally induced impact on internal optics and light source unit
- High-power RGBY LED light source
- 9°- 73° adjustable beam angle
- Excellent performance in any conditions

G·1 Beam POI

LED Moving Head

- Sharply defined beam and speedy operation
- No accumulation of dust and externally induced impact on internal optics and light source unit
- High-power white LED light source
- Narrow 2.8° beam
- Excellent performance in any conditions

G·1 Wash POI

LED Moving Head

- Bright wash with full color mixing
- No accumulation of dust and externally induced impact on internal optics and light source unit
- 19 high-power R, G, B, W LEDs
- Narrow 8.5° beam
- Excellent performance in any conditions

POI

IP66

i-2 RGBW POI
i-2 RED POI
i-2 GREEN POI
i-2 BLUE POI
i-2 WHITE POI

LED Wash Light

- Narrow 8.5° beam for long-throw applications
- 69 high-power LEDs
- High output, low consumption
- Lightweight and compact construction
- Excellent performance in any conditions

i-5 RGBW POI
i-5 RED POI
i-5 GREEN POI
i-5 BLUE POI
i-5 WHITE POI

LED Wash Light

- Narrow 8.5° beam for long-throw applications
- 203 high-power LEDs
- High output, low consumption
- Lightweight and compact construction
- Excellent performance in any conditions

P-2 POI

LED Wash Light

- RGBW LED wash light with interchangeable lens kits: 15°, 21° and 43°
- 18 high-power LEDs
- High output, low consumption
- 3 individually controllable segments
- Lightweight and compact construction
- Excellent performance in any conditions

P-5 POI

LED Wash Light

- RGBW LED wash light with interchangeable lens kits: 15°, 21° and 43°
- 44 high-power LEDs
- High output, low consumption
- Lightweight and compact construction
- Excellent performance in any conditions

P-5 W POI

LED Wash Light

- Cool white LED wash light with interchangeable lens kits: 15°, 21° and 43°
- 44 high-power LEDs
- High output, low consumption
- Lightweight and compact construction
- Excellent performance in any conditions

P-5 TW POI

LED Wash Light

- 2,200 K - 5,300 K LED wash light with interchangeable lens kits: 15°, 21° and 43°
- 44 high-power tuneable white LEDs
- High output, low consumption
- Lightweight and compact construction
- Excellent performance in any conditions

Q-2 POI

LED Flood/Blind/Strobe Light

- RGBW LED flood/blind/strobe light
- 864 high-power LEDs
- High output, low consumption
- Suitable for multiple applications
- 3 individually controllable segments
- Lightweight and compact construction
- Excellent performance in any conditions

Q-2 W POI

LED Flood/Blind/Strobe Light

- White LED flood/blind/strobe light
- 432 cool white LEDs (5,700 K)
- High output, low consumption
- Suitable for multiple applications
- 12 individually controllable segments
- Lightweight and compact construction
- Excellent performance in any conditions

Q-7 POI

LED Flood/Blind/Strobe Light

- RGBW LED flood/blind/strobe light
- 2,000 high-power LEDs
- High output, low consumption
- Suitable for multiple applications
- Lightweight and compact construction
- Excellent performance in any conditions

Q-7 W POI

LED Flood/Blind/Strobe Light

- White LED flood/blind/strobe light
- 1,000 cool white LEDs (5,700 K)
- High output, low consumption
- Suitable for multiple applications
- Lightweight and compact construction
- Excellent performance in any conditions

Connection diagrams

G Series

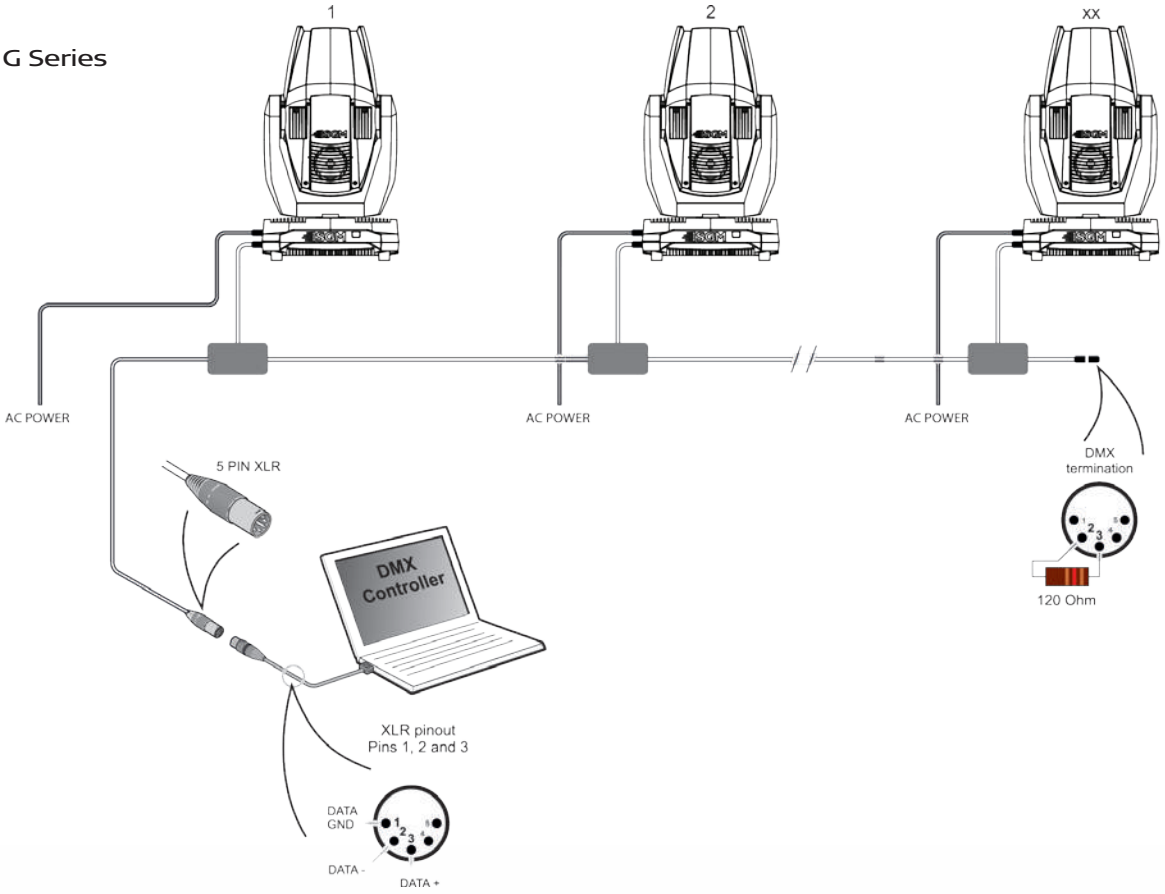

G-1 Series

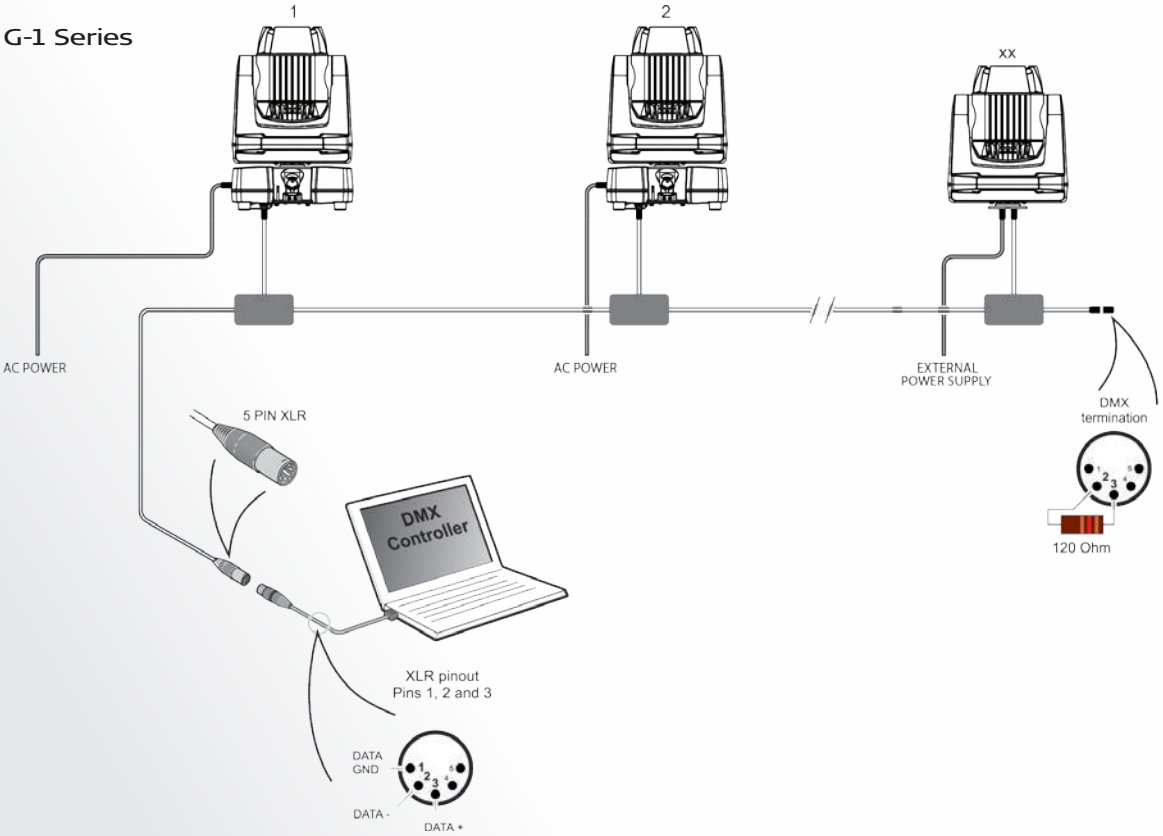

i-2 Series
P-2
Q-2 Series

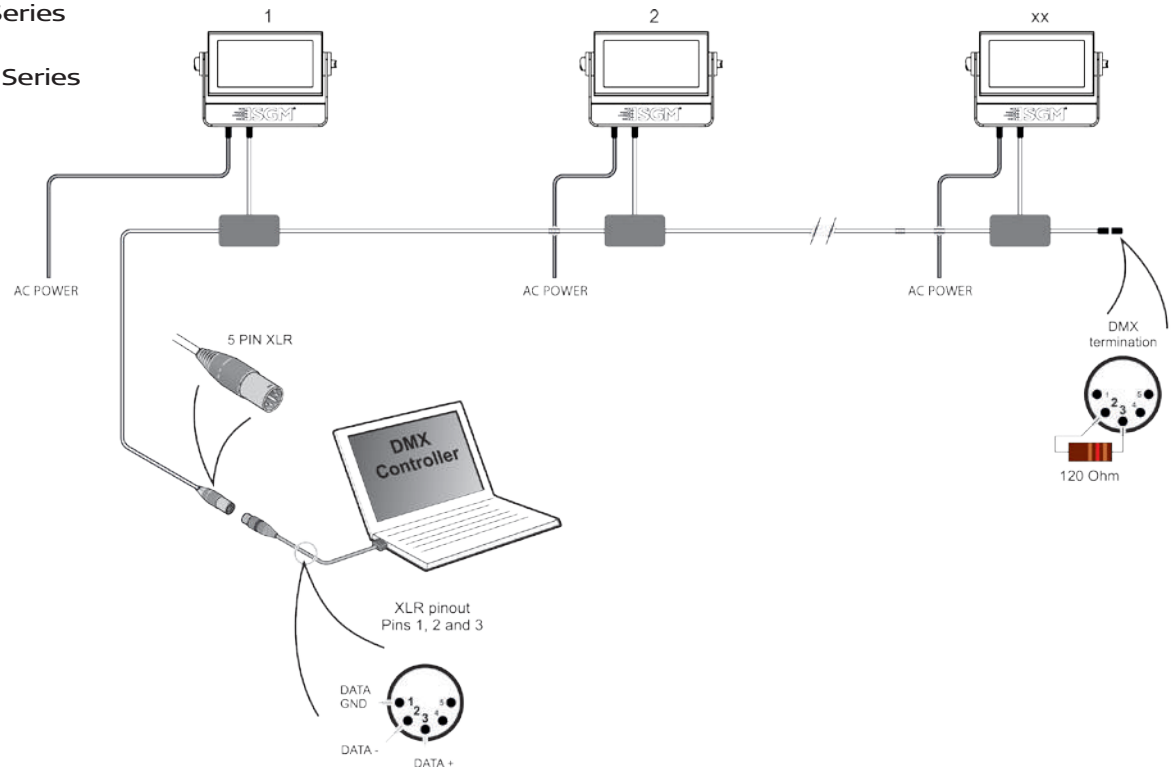

i-5 Series
P-5 Series
Q-7 Series

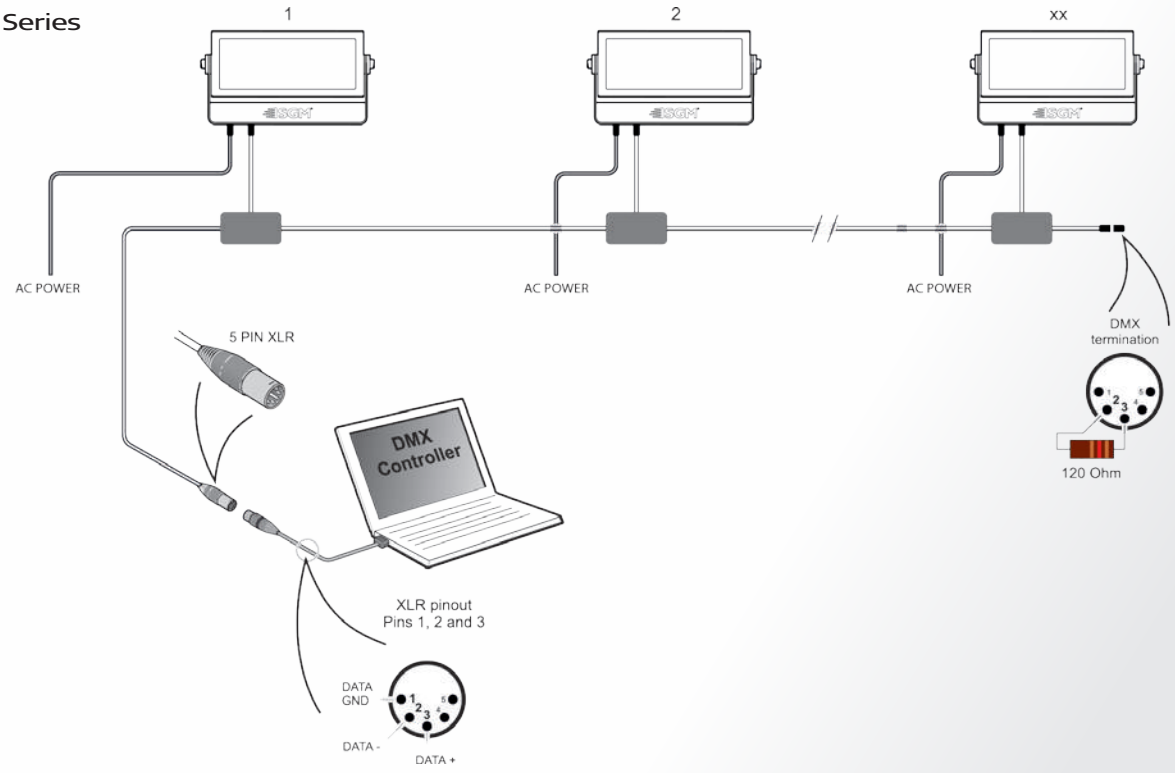

G•Spot POI
Specifications

Optics	Light source	High-power RGBY LED
	LEDs expected lifetime	50,000 hours*
	Zoom range, 16 bit	8° to 43° + pseudo zoom 1° to 43°
	Prism	4-facet rotating prism
	Frost	Variable 0% - 100%
Photometric	Light output	12,000 lm (all LEDs on)**
		3,000 lm (red)**
		3,100 lm (green)**
		1,400 lm (blue)**
	Color temperature range	2,000K - 10,000K
	Efficacy	12 lm/W
Gobos	Outside diameter	37.5 mm (Standard E size gobo)
	Maximum image diameter	30 mm
	Maximum thickness	1.1 mm black & white or 3.5 mm colored glass or textured gobos
	Glass gobo	Borosilicate high-temperature glass
	Metal gobo	Not recommended
Features	Iris	1-100%, Pulse effects
	Dimming	Electronic
	Strobe	Ultra-high-speed strobe effect (1-50Hz)
	Pan / tilt	540° / 270°
	Gobo wheels	2 independent rotatable gobo wheels:
		Gobo wheel 1: 5 indexable gobos + open
		Gobo wheel 2: 5 indexable gobos + open
	Effect wheels	2 independent effect wheels with semi-continuos effect
	Dehumidifier	Base / head
	Power/DMX indicator	Base
Electrical	AC power, nominal	100 - 240V 50/60 Hz
	AC power, max. rating	100 - 264V 50/60 Hz
	Power supply unit	Auto-ranging electronic switch-mode
	Main fuse	T12A-250V
	Max. power consumption	1,100 W
	Standby power	75 W
Programming and control	Protocol	USITT DMX512A
	Setting and addressing	RDM
	16-bit control	Dimmer, colors, pan/tilt, gobo index/rotation, zoom, focus
	Color temperature control	2,000K - 10,000K
	DMX channels	24, 30
Physical	Dimensions	Length (base): 470 mm (18.5 in.)
		Length (head): 585 mm (23 in.)
		Width (base): 492 mm (19.4 in.)
		Width (head): 458 mm (18 in.)
		Height (head straight up): 805 mm (31.6 in.)
		Height (maximum): 821 mm (32.3 in.)
	Weight	52 kg (114 lbs.)
	Material	Aluminium, steel, plastic PA6.6
	IP class	IP66
	Corrosion class	C5-M
	Color options	White – RAL 9010
		Black – RAL 9004
		Custom color – any RAL
Installation	Mounting points	Four times two quarter-turn locking points
	Orientation	Any
	Safety features	2 x attachment points for safety wire
		Minimum distance to combutible materials: 0.3mtr (11 In.)
		Minimum distance to illuminated surfaces: 0.3mtr (11 In.)
Thermal	Temperature range, Operating	–40° to +50°C (-40° to +122°F)
	Temperature range, Start-up	–20° to +50°C (-4° to +122°F)
	Temperature range, Storage	–40° to +80°C (-40° to +176°F)
	Humidity	98%
	Cooling	Active
Connections	DMX data in/out	1 x 5 meter cable for DMX in and out
	Power	1 x 5 meter cable with bare ends
Certified to	CSA E60598-1, Ed:2 ***	
	CSA-E598-2-17-98, Ed: 1 ***	
Conforms to	UL Std. 1573 ***	
	2014/35/EU: Low Voltage Directive	EN 60598-1, EN 60598-2-17, EN 62471, EN 60529
	2014/30/EU: EMC Directive	EN 55103-1, EN 55103-2, EN 61000-3-2, EN 61000-3-3
	RoHS2 Directive	2011/65/EU
Included items	Included items	Two Omega brackets with 1/4-turn fasteners
		User manual
Fixtures and accessories	Fixtures	Order no: 80021052 - G-Spot Moving Head, POI, BL
		Order no: 80021055 - G-Spot Moving Head, POI, WH
		Order no: 80021059 - G-Spot Moving Head, POI, CU
		Order no: 83061405 - Framing module for G-Spot with linear frost lens kit
	Cables	Order no: 83062011 - SGM USB uploader cable
	Bracket	Order no: 83060602 - Omega bracket
	Flightcase	Order no: 82051001 - Single flightcase G-Spot

**Figures provided by manufacturer and obtained under manufacturer's test conditions*

***Goniometer Scan / SGM Illumination Lab 1.6.0.0*

****Pending*

BL = Black (RAL 9004) / WH = White (RAL 9010) / CU = Custom Color (Any RAL color)

G•Profile POI
Specifications

Optics	Light source	High-power RGBY LED
	LEDs expected lifetime	50,000 hours*
	Zoom range, 16 bit	8° to 43° + pseudo zoom 1° to 43°
	Prism	4-facet rotating prism
	Frost	Variable 0% - 100%
Photometric	Light output	10,000 lm (all LEDs on)**
		2,500 lm (red)**
		2,600 lm (green)**
		1,200 lm (blue)**
	Color temperature range	2,000K - 10,000K
	Efficacy	10.5 lm/W
Gobos	Outside diameter	37.5 mm (Standard E size gobo)
	Maximum image diameter	30 mm
	Maximum thickness	1.1 mm black & white or 3.5 mm colored glass or textured gobos
	Glass gobo	Borosilicate high temperature glass
	Metal gobo	Not recommended
Features	Iris	1-100%, Pulse effects
	Dimming	Electronic
	Strobe	Ultra-high-speed strobe effect (1-50Hz)
	Pan / tilt	540° / 270°
	Gobo wheels	1 rotatable gobo wheels: 5 indexable gobos + open
	Framing	Rotatable framing module, +/- 45°
		4 controllable shutter blades, individually adjustable +/- 30°
	Effect wheel	Effect wheel, continuous rotation with variable speed and direction
	Dehumidifier	Base / head
	Power/DMX indicator	Base
Electrical	AC power, nominal	100 - 240V 50/60 Hz
	AC power, max. rating	100 - 264V 50/60 Hz
	Power supply unit	Auto-ranging electronic switch-mode
	Main fuse	T12A-250V
	Max. power consumption	1,100 W
	Standby power	75 W
Programming and Control	Protocol	USITT DMX512A
	Setting and addressing	RDM
	16-bit control	Dimmer, colors, pan/tilt, gobo index/rotation, framing blades/rotation, zoom, focus
	Color temperature control	2,000K - 10,000K
	DMX channels	31, 46
Physical	Dimensions	Length (base): 470 mm (18.5 in.)
		Length (head): 585 mm (23 in.)
		Width (base): 492 mm (19.4 in.)
		Width (head): 458 mm (18 in.)
		Height (head straight up): 805 mm (31.6 in.)
		Height (maximum): 821 mm (32.3 in.)
	Weight	52 kg (114 lbs.)
	Material	Aluminium, steel, plastic PA6.6
	IP class	IP66
	Corrosion class	C5-M
	Color options	White – RAL 9010
		Black – RAL 9004
		Custom color – any RAL
Installation	Mounting points	Four times two quarter-turn locking points
	Orientation	Any
	Safety features	2 x attachment points for safety wire
		Minimum distance to combutible materials: 0.3 mtr (11 In.)
		Minimum distance to illuminated surfaces: 0.3 mtr (11 In.)
Thermal	Temperature range, Operating	–40° to +50°C (-40° to +122°F)
	Temperature range, Start-up	–20° to +50°C (-4° to +122°F)
	Temperature range, Storage	–40° to +80°C (-40° to +176°F)
	Humidity	98%
	Cooling	Active
Connections	DMX data in/out	1 x 5 meter cable for DMX in and out
	Power	1 x 5 meter cable with bare ends
Certified to	CSA E60598-1, Ed: 2 ***	
	CSA-E598-2-17-98, Ed: 1 ***	
Conforms to	UL Std. 1573 ***	
	2014/35/EU: Low Voltage Directive	EN 60598-1, EN 60598-2-17, EN 62471, EN 60529
	2014/30/EU: EMC Directive	EN 55103-1, EN 55103-2, EN 61000-3-2, EN 61000-3-3
	RoHS2 Directive	2011/65/EU
Included items	Included items	Two Omega brackets with 1/4-turn fasteners
		User manual
Fixtures and accessories	Fixtures	Order no: 80021060 - G-Profile Moving Head, POI, BL
		Order no: 80021065 - G-Profile Moving Head, POI, WH
		Order no: 80021069 - G-Profile Moving Head, POI, CU
		Order no: 83061405 - Framing module for G-Spot with linear frost lens kit
	Cables	Order no: 83062011 - SGM USB uploader cable
	Bracket	Order no: 83060602 - Omega bracket
	Flightcase	Order no: 82051003 - Single flightcase G-Profile

**Figures provided by manufacturer and obtained under manufacturer's test conditions*

***Goniometer Scan / SGM Illumination Lab 1.6.0.0*

****Pending*

BL = Black (RAL 9004) / WH = White (RAL 9010) / CU = Custom Color (Any RAL color)

G•Wash POI
Specifications

Optics	Light source	High-power RGBY LED
	LEDs expected lifetime	50,000 hours*
	Beam angle	9° to 73°
	Beam shaper	Rotating and indexable
	Variable aperture	Intensity optimized / Projection optimized
	Fresnel lens diameter	200 mm (7.87 in.)
Photometric	Total output	13,500 lm (all LEDs on) **
		3,800 lm (red)**
		3,800 lm (green)**
		1,400 lm (blue)**
	Color temperature range	2,000K - 10,000K
	Efficacy	14 lm/W
	Beam 50% angle	9° to 46°
	Beam 10% angle	73° to 15°
Features	Dimming	Electronic
	Strobe	Ultra-high-speed strobe effect (1-50Hz)
	Pan/Tilt	540° / 270°
	Dehumidifier	Base / Head
	Power/DMX indicator	Base
Electrical	AC Power, nominal	200 - 240V 50/60 Hz
	AC Power, max. Rating	190 - 264V 50/60 Hz
	Power supply unit	Auto-ranging electronic switch-mode
	Main fuse	T12A-250V
	Max. power consumption	1100 W
	Standby power	75 W
Programming and control	Protocol	USITT DMX512A
	Setting and addressing	RDM
	16-bit control	Dimmer, color, pan/tilt, beam shaper index/rotation, zoom, focus
	Color temperature control	2,000K - 10,000K
	DMX channels	16, 19
Physical	Dimensions	Length (base): 470 mm (18.5 in.)
		Length (head): 585 mm (23 in.)
		Width (base): 492 mm (19.4 in.)
		Width (head): 458 mm (18 in.)
		Height (head straight up): 805 mm (31.6 in.)
		Height (maximum): 821 mm (32.3 in.)
	Weight	49 kg (108 lbs.)
	Material	Aluminium, steel, plastic PA6.6
	IP class	IP66
	Corrosion class	C5-M
	Color options	White – RAL 9010
		Black – RAL 9004
		Custom color – any RAL
Installation	Mounting points	Four times two quarter-turn locking points
	Orientation	Any
	Safety features	2 x attachment points for safety wire
		Minimum distance to combutible materials: 0.3 mtr (11 In.)
		Minimum distance to illuminated surfaces: 0.3 mtr (11 In.)
Thermal	Temperature range, Operating	–40° to +50°C (-40° to +122°F)
	Temperature range, Start-up	–20° to +50°C (-4° to +122°F)
	Temperature range, Storage	–40° to +80°C (-40° to +176°F)
	Humidity	98%
	Cooling	Active
Connections	DMX data in/out	1 x 5 meter cable for DMX in and out
	Power	1 x 5 meter cable with bare ends
Conforms to	2014/35/EU: Low Voltage Directive	EN 60598-1, EN 60598-2-17, EN 62471, EN 60529
	2014/30/EU: EMC Directive	EN 55103-1, EN 55103-2, EN 61000-3-2, EN 61000-3-3
	RoHS2 Directive	2011/65/EU
Included items	Included items	Two Omega brackets with 1/4-turn fasteners
		User manual
Fixtures and accessories	Fixtures	Order no: 80021150 - G-Wash Moving Head, POI, BL
		Order no: 80021155 - G-Wash Moving Head, POI, WH
		Order no: 80021159 - G-Wash Moving Head, POI, CU
	Cables	Order no: 83062011 - SGM USB uploader cable
	Bracket	Order no: 83060602 - Omega bracket
	Flightcase	Order no: 82051008 - Single flightcase G-Wash

**Figures provided by manufacturer and obtained under manufacturer's test conditions*

***Goniometer Scan / SGM Illumination Lab 1.6.0.0*

BL = Black (RAL 9004) / WH = White (RAL 9010) / CU = Custom Color (Any RAL color)

G•1 Beam POI
Specifications

Optics	Light source	High-power white LED (6,500K)
	LEDs expected lifetime	50,000 hours*
	Beam angle(s)	2.8°
		0.3°(Aperture pseudo zoom)
	Focus	Motorized focus
Photometric	Light source output	62,000 lux at 3 m (9.8 ft.)*
	Color temperature	6,500K
Gobos	Gobo wheel	19 gobos + 2 times open
		Oscillation effect
		Gobo shake
		Continuous scroll CW & CCW
Colors	Color wheel	14 colors + open
		Split color
		Continuous scroll CW & CCW
Features	Dimming	Electronic
	Strobe	Ultra-high-speed strobe effect (1-50 Hz)
	Pan / tilt	Endless / 240°
	Pan modes:	540°, 360°, 360° shortest path, continuous CW, continuous CCW
	Built-in macro effects	50
	Dehumidifier	Head
	Power/DMX indicator	Yoke
Electrical incl. base	AC power, nominal	100-240V 50/60 Hz
	AC power, max. rating	90-264V 50/60 Hz
	Maximum inrush current @ 100VAC	2.2Amp
	Maximum inrush current @ 240VAC	6.9Amp
	Power supply unit	Auto-ranging electronic switch-mode
	Max. power consumption	50W
	Standby power	8W
Electrical excl. base	AC power, nominal	24VDC
	Max. power consumption	50W
Programming and control	Protocol	USITT DMX512A
		CRMX, W-DMX™ G2, W-DMX™ G3, W-DMX™ G4, W-DMX™ G4S
	Setting and addressing	RDM
		Software upgradable with SGM USB uploader cable (P/N:83062011)
	Wireless DMX	LumenRadio CRMX
	Cabled DMX	1 x 5 meter cable for DMX in and out
	16-bit control	Dimmer, pan and tilt
	DMX channels	12
Physical	Dimensions	Length (base): 219 mm (8.62 in.)
		Length (head incl. yoke): 288 mm (11.34 in.)
		Width (base): 255 mm (10.04 in.)
		Width (head): 150 mm (5.9 in.)
		Height (base): 90 mm (3.54 in.)
		Height (head straight up): 382 mm (15.04 in.)
	Weight	8.0 kg (17.6 lbs.)
	Material	Aluminium, steel, plastic PC/ASA, rubber
	IP class	IP66
	Corrosion class	C5-M
	Color options	White – RAL 9010
		Black – RAL 9004
		Custom color – any RAL
Installation	Mounting	Two quarter-turn locking points for one Omega bracket
	Orientation	Any
	Safety features	2 x attachment points for safety wire
		Minimum distance to combustible materials: 0.3 m (11 in.)
		Minimum distance to illuminated surfaces: 0.3 m (11 in.)
Thermal	Temperature range, Operating	–40° to +50°C (-40° to +122°F)
	Temperature range, Start-up	–20° to +50°C (-4° to +122°F)
	Temperature range, Storage	–40° to +80°C (-40° to +176°F)
	Humidity	98%
	Cooling	Passive
Connections	DMX data in/out	1 x 5 meter cable for DMX in and out
	Power	1 x 5 meter cable with bare ends
Conforms to	UL Std. 1573 ***	
	2014/35/EU: Low Voltage Directive	EN 60598-1, EN 60598-2-17, EN 62471, EN 60529
	2014/30/EU: EMC Directive	EN 55103-1, EN 55103-2, EN 55015, EN 61547, EN 61000-3-2, EN 61000-3-3
	RoHS2 Directive	2011/65/EU
Included items	Included items	One Omega bracket with 1/4-turn fasteners
		User manual
Fixtures and accessories	Fixtures	Order no: 80100201 - G-1 Beam, POI, BL,
		Order no: 80100211 - G-1 Beam, POI, WH,
		Order no: 80100291 - G-1 Beam, POI, CU,
	Wireless transmitter	Order no: 80070229 - Lumen Radio CRMX transmitter (DMX only)
	Cables	Order no: 83062011 - SGM USB uploader cable
	Bracket	Order no: 83060602 - Omega bracket
		Order no: 83061707 - Ceiling mount for G-1
	Flightcase	Order no: 82051004 - Flightcase for 4 pcs. G-1 Beam

**Figures provided by manufacturer and obtained under manufacturer's test conditions*

***Photometrics / SGM Illumination Lab 1.6.0.0*

****Pending*

BL = Black (RAL 9004) / WH = White (RAL 9010) / CU = Custom Color (Any RAL color)

G•1 Wash POI
Specifications

Optics	Light source	19 LEDs in total RED 4 pcs. Green 4 pcs. Blue 4 pcs. White 7 pcs. (5,700K)
	LEDs expected lifetime	50,000 hours*
	Beam angle(s)	8.5°
Photometric	Total output	5,000 lux at 3 m (9.8 ft.)**
Features	Dimming	Electronic
	Strobe	Ultra high-speed strobe effect (1-50 Hz)
	Pan / tilt	Endless / 240°
	Pan modes:	540°, 360°, 360° shortest path, continuous CW, continuous CCW
	Built-in macro effects	50
	Dehumidifier	Head
	Power/DMX indicator	Yoke
Electrical incl. base	AC power, nominal	100-240V 50/60 Hz
	AC power, max. rating	90-264V 50/60 Hz
	Maximum inrush current @ 100VAC	2.2Amp
	Maximum inrush current @ 240VAC	6.9Amp
	Power supply unit	Auto-ranging electronic switch-mode
	Max. power consumption	60W
	Standby power	8W
Electrical excl. base	AC power, nominal	24VDC
	Max. power consumption	60W
Programming and control	Protocol	USITT DMX512A CRMX, W-DMX™ G2, W-DMX™ G3, W-DMX™ G4, W-DMX™ G4S
	Setting and addressing	RDM Software upgradable with SGM USB uploader cable (P/N:83062011)
	Wireless DMX	LumenRadio CRMX
	Cabled DMX	1 x 5 meter cable for DMX in and out
	16-bit control	Dimmer, pan and tilt
	DMX channels	13
Physical	Dimensions	Length (base): 219 mm (8.62 in.) Length (head incl. yoke): 288 mm (11.34 in.) Width (base): 255 mm (10.04 in.) Width (head): 150 mm (5.9 in.) Height (base): 90 mm (3.54 in.) Height (head straight up): 382 mm (15.04 in.)
	Weight	7.7 kg (17 lbs.)
	Material	Aluminium, steel, plastic PC/ASA, rubber
	IP class	IP66
	Corrosion class	C5-M
	Color options	White – RAL 9010 Black – RAL 9004 Custom color – any RAL
Installation	Mounting	Two quarter-turn locking points for one Omega bracket
	Orientation	Any
	Safety features	2 x attachment points for safety wire Minimum distance to combustible materials: 0.3 m (11 in.) Minimum distance to illuminated surfaces: 0.3 m (11 in.)
Thermal	Temperature range, Operating	–40° to +50°C (-40° to +122°F)
	Temperature range, Start-up	–20° to +50°C (-4° to +122°F)
	Temperature range, Storage	–40° to +80°C (-40° to +176°F)
	Humidity	98%
	Cooling	Passive
Connections	DMX data in/out	1 x 5 meter cable for DMX in and out
	Power	1 x 5 meter cable with bare ends
Conforms to	2014/35/EU: Low Voltage Directive	EN 60598-1, EN 60598-2-17, EN 62471, EN 60529
	2014/30/EU: EMC Directive	EN 55103-1, EN 55103-2, EN 55015, EN 61547, EN 61000-3-2, EN 61000-3-3
	RoHS2 Directive	2011/65/EU
Included items	Included items	One Omega bracket with 1/4-turn fasteners User manual
Fixtures and accessories	Fixtures	Order no: 80100401 - G-1 Wash, POI, BL Order no: 80100411 - G-1 Wash, POI, WH Order no: 80100491 - G-1 Wash, POI, CU
	Wireless transmitter	Order no: 80070229 - Lumen Radio CRMX transmitter (DMX only)
	Cables	Order no: 83062011 - SGM USB uploader cable
	Bracket	Order no: 83060602 - Omega bracket Order no: 83061707 - Ceiling mount for G-1
	Flightcase	Order no: 82051006 - Flightcase for 4 pcs. G-1 Wash

**Figures provided by manufacturer and obtained under manufacturer's test conditions*

***Photometrics / SGM Illumination Lab 1.6.0.0*

BL = Black (RAL 9004) / WH = White (RAL 9010) / WH = White (RAL 9010) / CU = Custom Color (Any RAL color)

i•2 POI Series
Specifications

Optics	Light source	69 LEDs in total
		RGBW: red 18 pcs., green 18 pcs., blue 9 pcs., white 24 pcs. (5,700K)
		RED, GREEN, BLUE, WHITE: 69 pcs. (5,700K)
	LEDs expected lifetime	50,000 hours*
	Lens option	8.5°
	Diffusion filters (optional)	18°, 40°, 60°x10° (elliptical)
	Honeycomb (optional)	Internal
Photometrics	Light output RGBW (all LEDs on)*	8,100 lm (RED: 1,400*, GREEN: 2,400*, BLUE: 300*, WHITE: 5,200*)
	Efficacy	RGBW: 40.5 lm/W. WHITE: 72.5 lm/W, RED: 23.5 lm/W, GREEN: 41.5 lm/W
	Light output White	14,500 lm*
	Color temperature White	5,700 K
	Light output Red	4,700 lm*
	Light output Green	8,300 lm*
Features	Tilt	0 - 190°
	Dehumidifier	Head
	Power/DMX indicator	Head
Electrical	AC power nominal	100 - 277V 50/60Hz
	AC power max rating	90 - 305V 50/60Hz
	Max. inrush current @ 240VAC	75A
	Maximum power consumption	275 W (all LEDs on)
	Typical power consumption	200 W (all LEDs on)
	Power factor	0.98 PF (230 V)
Programming and control	Protocol	USITT DMX512 A
	Setting and addressing	RDM
		Software upgradable via uploader cable (P/N:83062011)
	DMX channels	RGBW: 3, 4, 6, 8. WHITE, RED, GREEN, BLUE: 1, 2
Physical	Dimensions (L x H x W)	334 x 223 x 105 mm (13,2 x 8,8 x 4.1 in)
	Weight	6.1 kg (13.4 lbs.)
	Material	Aluminium
	Lens	PE and tempered glass front
	IP class	IP66
	Corrosion Class	C5-M
	Color options	Black – RAL 9004, White – RAL 9010, Custom color – any RAL
Installation	Mounting points	Two quarter-turn locking points for one Omega bracket
	Orientation	Any
	Rigging possibilities	Floor stand (included) or hanging (Omega bracket included)
	Safety features	Bottom mount for safety wire
		Min. dist. to combustible materials/illuminated surfaces: 0.3 m (11 in.)
Thermal	Temperature range, Operating	–40° to +50°C (-40° to +122°F)
	Temperature range, Start-up	–20° to +50°C (-4° to +122°F)
	Temperature range, Storage	–40° to +80°C (-40° to +176°F)
	Humidity (max.)	98%
	Cooling	Active, forced air, temperature-regulated, low noise
Connections	DMX data in/out	1 x 5 meter cable for DMX in and out
	Power	1 x 5 meter cable with bare ends
Conforms to	2014/35/EU: Low Voltage Directive	EN 60598-1, EN 60598-2-17, EN 62471, EN 60529
	2014/30/EU: EMC Directive	EN 55103-1, EN 55103-2, EN 55015, EN 61547, EN 61000-3-2, EN 61000-3-3
	RoHS2 Directive	2011/65/EU
Included items	Included items	Floor stand (incl. screws)
		1 Omega bracket
		User manual
Fixtures and accessories	Fixtures	Order no: 80031200 - i-2 RGBW Wash, 8.5deg, POI, Black**
		Order no: 80031202 - i-2 RED Wash, 8.5deg, POI, Black**
		Order no: 80031203 - i-2 GREEN Wash, 8.5deg, POI, Black**
		Order no: 80031204 - i-2 BLUE Wash, 8.5deg, POI, Black**
		Order no: 80031205 - i-2 WHITE Wash, 8.5deg, POI, Black**
	Cables	Order no: 83062011 - SGM USB uploader cable
	Bracket	Order no: 83060602 - Omega bracket
	Barndoor	Order no: 83061127 - Accessory holder i-2/P-2 series
		Order no: 83061129 - Barndoor 4-way, i-2/P-2/Q-2 series
		Order no: 83061130 - Barndoor 8-way, i-2/P-2/Q-2 series
		Order no: 83061131 - Color frame, i-2/P-2/Q-2 series
	Flightcase	Order no: 82051503 - Flightcase for 4 pcs. of i-2/P-2/Q-2 incl. barndoors

**Photometrics / SGM Illumination Lab*

Figures provided by manufacturer and obtained under manufacturer's test conditions

***Housings are also available in white or a custommade RAL color*

i•5 POI Series
Specifications

Optics	Light source	203 LEDs in total
		RGBW: red 48 pcs., green 51 pcs., blue 48 pcs., white 56 pcs. (5,700K)
		RED, GREEN, BLUE, WHITE: 203 pcs. (5,700K)
	LEDs expected lifetime	50,000 hours*
	Lens option	8.5°
	Diffusion filters (optional)	18°, 40°, 60°x10° (elliptical)
	Honeycomb (optional)	Internal
Photometrics	Light output RGBW (all LEDs on)*	19,800 lm (RED: 3,600*, GREEN: 6,000*, BLUE: 1,100*, WHITE: 8,400)
	Light output White	35,100 lm*
	Efficacy	RGBW: 47 lm/W. WHITE: 83.6 lm/W
Features	Tilt	0 - 190°
	Dehumidifier	Base / head
	Power/DMX indicator	Base
Electrical	AC power nominal	208 - 240 V nominal 50/60 Hz
	AC power max rating	190 - 264V 50/60Hz
	Maximum inrush current @ 240VAC	20A
	Maximum power consumption	450 W (all LEDs on)
	Typical power consumption	420 W (all LEDs on)
	Power factor	0.98 PF (230 V)
Programming and control	Protocol	USITT DMX512 A
	Setting and addressing	RDM
		Software upgradable with SGM USB uploader cable (P/N:83062011)
	DMX channels	RGBW: 3, 4, 6, 8, 9, 10. WHITE, RED, GREEN, BLUE: 1, 2
Physical	Dimensions (L x H x W)	497 x 268 x 122 mm (19.6 x 10.6 x 4.8 in)
	Weight	8.9 kg (19.6 lbs.)
	Material	Aluminium
	Lens	PE and tempered glass front
	IP class	IP66
	Corrosion class	C5-M
	Color options	Black – RAL 9004, White – RAL 9010, Custom color – any RAL
Installation	Mounting points	Two times two quarter-turn locking points for one or two Omega brackets
	Orientation	Any
	Rigging possibilities	Floor stand (included) or hanging (Omega bracket included)
	Safety features	Bottom mount for safety wire
		Min.dist. to combustible materials/illuminated surfaces: 0.3 m (11 in.)
Thermal	Temperature range, Operating	−40° to +50°C (-40° to +122°F)
	Temperature range, Start-up	−20° to +50°C (-4° to +122°F)
	Temperature range, Sorage	−40° to +80°C (-40° to +176°F)
	Humidity (max.)	98%
	Cooling	Active, forced air, temperature-regulated, low noise
Connections	DMX data in/out	1 x 5 meter cable for DMX in and out
	Power	1 x 5 meter cable with bare ends
Conforms to	2014/35/EU: Low Voltage Directive	EN 60598-1, EN 60598-2-17, EN 62471, EN 60529
	2014/30/EU: EMC Directive	EN 55103-1, EN 55103-2, EN 55015, EN 61547, EN 61000-3-2, EN 61000-3-3
	RoHS2 Directive	2011/65/EU
Included items	Included items	Floor stand (incl. screws)
		2 pcs. Omega bracket
		User manual
Fixtures and accessories	Fixtures	Order no: 80031400 - i-5 RGBW Wash, 8.5deg, POI, Black**
		Order no: 80031402 - i-5 RED Wash, 8.5deg, POI, Black**
		Order no: 80031403 - i-5 GREEN Wash, 8.5deg, POI, Black**
		Order no: 80031404 - i-5 BLUE Wash, 8.5deg, POI, Black**
		Order no: 80031405 - i-5 WHITE Wash, 8.5deg, POI, Black**
	Cables	Order no: 83062011 - SGM USB uploader cable
	Bracket	Order no: 83060602 - Omega bracket
		Order no: 83060603 - BCC-2 Dual bracket
		Order no: 83060604 - BCC-4 Quad bracket
		Order no: 83060610 - Floorstand for P/Q /X series with 1/4-turn fasteners
	Barndoor	Order no: 83061119 - Accessory holder i-5/P-5
		Order no: 83061120 - Barndoor 4-way, i-5/P-5/X-5/Q-7
		Order no: 83061121 - Barndoor 8-way, i-5/P-5/X-5/Q-7
		Order no: 83061122 - Color frame, i-5/P-5/X-5/Q-7
	Flightcase	Order no: 82051501 - Flightcase for 4 pcs. of i-5/P-5/Q-7/X-5
		Order no: 82051502 - Flightcase for 4 pcs. of i-5/P-5/Q-7/X-5 incl. barndoors

**Photometrics / SGM Illumination Lab*

***Housings are also available in white or a custommade RAL color*

Figures provided by manufacturer and obtained under manufacturer's test conditions

P•2 POI
Specifications

Optics	Light source	18 x high-power 10W RGBW LEDs
	LEDs expected lifetime	50,000 hours*
	Interchangable lens option	15°, 21° & 43°
Photometric	Light output	6,300 lm** (43° lens)
	Efficacy	31,5 lm/W
Features	Tilt	0 - 190°
	LED panel	3 individually controllable segments
	Dehumidifier	Head
	Power/DMX indicator	Head
Electrical	AC power nominal	100 - 277V 50/60Hz
	AC power max rating	90 - 305V 50/60Hz
	Maximum inrush current @ 240VAC	75A
	Maximum power consumption	275 W (all LEDs on)
	Typical power consumption	200 W (all LEDs on)
	Power factor	0.98 PF (230 V)
Programming and control	Protocol	USITT DMX512 A
	Setting and addressing	RDM
		Software upgradable with SGM USB uploader cable (P/N:83062011)
	DMX channels	3, 6, 9, 12, 15 or 22
Physical	Dimensions (L x H x W)	334 x 223 x 105 mm (13.2 x 8.8 x 4.1 in)
	Weight	6.1 kg (13.4 lbs.)
	Material	Aluminium
	Lens	PE and tempered glass front
	IP class	IP66
	Corrosion class	C5-M
	Color options	White – RAL 9010
		Black – RAL 9004
		Custom color – any RAL
Installation	Mounting points	Two quarter-turn locking points for one Omega bracket
	Orientation	Any
	Rigging possibilities	Floor stand (included) or hanging (Omega clamp included)
	Safety features	Bottom mount for safety wire
		Minimum distance to combustible materials: 0.3 m (11 in.)
		Minimum distance to illuminated surfaces: 0.3 m (11 in.)
Thermal	Temperature range, Operating	–40° to +50°C (-40° to +122°F)
	Temperature range, Start-up	–20° to +50°C (-4° to +122°F)
	Temperature range, Storage	–40° to +80°C (-40° to +176°F)
	Humidity (max.)	0,98
	Cooling	Active, forced air, temperature-regulated, low noise
Connections	DMX data in/out	1 x 5 meter cable for DMX in and out
	Power	1 x 5 meter cable with bare ends
Certified to	CSA E60598-1:02, Ed: 2 ***	
	CSA-E598-2-17-98, Ed: 1 ***	
Conforms to	UL Std. 1573 ***	
	2014/35/EU: Low Voltage Directive	EN 60598-1, EN 60598-2-17, EN 62471, EN 60529
	2014/30/EU: EMC Directive	EN 55103-1, EN 55103-2, EN 55015, EN 61547, EN 61000-3-2, EN 61000-3-3
	RoHS2 Directive	2011/65/EU
Included items	Included items	Floor stand (incl. screws)
		1 Omega bracket
		User manual
Fixtures and accessories	Fixtures	Order no: 80030900 - P-2 Wash, 43deg, POI, BL
		Order no: 80030940 - P-2 Wash, 43deg, POI, WH
		Order no: 80030970 - P-2 Wash, 43deg, POI, CU
		Order no: 80030901 - P-2 Wash, 21deg, POI, BL
		Order no: 80030941 - P-2 Wash, 21deg, POI, WH
		Order no: 80030971 - P-2 Wash, 21deg, POI, CU
		Order no: 80030902 - P-2 Wash, 15deg, POI, BL
		Order no: 80030942 - P-2 Wash, 15deg, POI, WH
		Order no: 80030972 - P-2 Wash, 15deg, POI, CU
	Cables	Order no: 83062011 - SGM USB uploader cable
	Lens/s	Order no: 83061134 - P-2, Lens kit (43°)
		Order no: 83061133 - P-2, Lens kit (21°)
		Order no: 83061132 - P-2, Lens kit (15°)
	Bracket	Order no: 83060602 - Omega bracket
	Barndoor	Order no: 83061127 - Accessory Holder i-2/P-2 series
		Order no: 83061129 - Barndoor 4-way, i-2/P-2/Q-2 series
		Order no: 83061130 - Barndoor 8-way, i-2/P-2/Q-2 series
		Order no: 83061131 - Color frame, i-2/P-2/Q-2 series
	Flightcase	Order no: 82051503 - Flightcase for 4 pcs. of i-2/P-2/Q-2 incl. barndoors

**Figures provided by manufacturer and obtained under manufacturer's test conditions*

***Goniometer Scan / SGM Illumination Lab 1.6.0.0*

****Pending*

BL = Black (RAL 9004) / WH = White (RAL 9010) / CU = Custom Color (Any RAL color)

P•5 POI
Specifications

Optics	Light source	44 x high-power 10W RGBW LEDs
	LEDs expected lifetime	50,000 hours*
	Interchangable lens option	15°, 21° & 43°
Photometric	Light output	19,300 lm** (43° lens)
	Efficacy	46 lm/W
Features	Tilt	0 - 190°
	Dehumidifier	Base / head
	Power/DMX indicator	Base
Electrical	AC power	208 - 240V nominal 50/60Hz
	Maximum inrush current @ 240VAC	20A
	Maximum power consumption	450 W (all LEDs on)
	Typical power consumption	420 W (all LEDs on)
	Power factor	0.98 PF (230 V)
Programming and control	Protocol	USITT DMX512 A
	Setting and addressing	RDM
		Software upgradable with SGM USB uploader cable (P/N:83062011)
	DMX channels	3, 4, 6, 8, 9 or 10
Physical	Dimensions (L x H x W)	497 x 268 x 122 mm (19.6 x 10.6 x 4.8 in)
	Weight	8.9 kg (19.6 lbs.)
	Material	Aluminium
	Lens	PE and tempered glass front
	IP class	IP66
	Corrosion class	C5-M
	Color options	White – RAL 9010
		Black – RAL 9004
		Custom color – any RAL
Installation	Mounting points	Two times two quarter-turn locking points for one or two Omega brackets
	Orientation	Any
	Rigging possibilities	Floor stand (included) or hanging (Omega clamps included)
	Safety features	Bottom mount for safety wire
		Minimum distance to combustible materials: 0.3 m (11 in.)
		Minimum distance to illuminated surfaces: 0.3 m (11 in.)
Thermal	Temperature range, Operating	−40° to +50°C (-40° to +122°F)
	Temperature range, Start-up	−20° to +50°C (-4° to +122°F)
	Temperature range, Storage	−40° to +80°C (-40° to +176°F)
	Humidity (max.)	98%
	Cooling	Active, forced air, temperature-regulated, low noise
Connections	DMX data in/out	1 x 5 meter cable for DMX in and out
	Power	1 x 5 meter cable with bare ends
Certified to	CSA Std. C22.2 No. 166 ***	
Conforms to	UL Std. 1573 ***	
	2014/35/EU: Low Voltage Directive	EN 60598-1, EN 60598-2-17, EN 62471, EN 60529
	2014/30/EU: EMC Directive	EN 55103-1, EN 55103-2, EN 55015, EN 61547, EN 61000-3-2, EN 61000-3-3
	RoHS2 Directive	2011/65/EU
Included items	Included items	Floor stand (incl. screws)
		2 pcs. Omega brackets
		User manual
Fixtures and accessories	Fixtures	Order no: 80030700 - P-5 Wash, 43deg, POI, BL
		Order no: 80030730 - P-5 Wash, 43deg, POI, WH
		Order no: 80030770 - P-5 Wash, 43deg, POI, CU
		Order no: 80030701 - P-5 Wash, 21deg, POI, BL
		Order no: 80030731 - P-5 Wash, 21deg, POI, WH
		Order no: 80030771 - P-5 Wash, 21deg, POI, CU
		Order no: 80030702 - P-5 Wash, 15deg, POI, BL
		Order no: 80030732 - P-5 Wash, 15deg, POI, WH
		Order no: 80030772 - P-5 Wash, 15deg, POI, CU
	Lens/s	Order no: 83061118 - P-5, Lens kit (43°)
		Order no: 83061117 - P-5, Lens kit (21°)
		Order no: 83061116 - P-5, Lens kit (15°)
	Cables	Order no: 83062011 - SGM USB uploader cable
	Brackets	Order no: 83060603 - BCC-2 Dual bracket
		Order no: 83060604 - BCC-4 Quad bracket
		Order no: 83060602 - Omega bracket
	Floorstand	Order no: 83060610 - Floorstand for i, P, Q and X series with 1/4-turn fasteners
	Barndoor	Order no: 83061119 - Accessory holder i-5/P-5 Series
		Order no: 83061120 - Barndoor 4-way, i-5/P-5/X-5/Q-7 Series
		Order no: 83061121 - Barndoor 8-way, i-5/P-5/X-5/Q-7 Series
		Order no: 83061122 - Color frame, i-5/P-5/X-5/Q-7 Series
	Flightcase	Order no: 82051501 - Flightcase for 4 pcs. of i-5/P-5/Q-7/X-5
		Order no: 82051502 - Flightcase for 4 pcs. of i-5/P-5/Q-7/X-5 incl. barndoors

**Figures provided by manufacturer and obtained under manufacturer's test conditions*

***Goniometer Scan / SGM Illumination Lab 1.6.0.0*

****Pending*

BL = Black (RAL 9004) / WH = White (RAL 9010) / CU = Custom Color (Any RAL color)

P•5 W POI
Specifications

Optics	Light source	44 x high-power 10W cool white LEDs (6,400K)
	LEDs expected lifetime	50,000 hours*
	Interchangable lens option	15°, 21° & 43°
Photometric	Light output	23,700 lm** (43° lens)
	Efficacy	56,4 lm/W
Features	Tilt	0 - 190°
	Dehumidifier	Base / head
	Power/DMX indicator	Base
Electrical	AC power	208 - 240V nominal 50/60Hz
	Maximum inrush current @ 240VAC	20A
	Maximum power consumption	450 W (all LEDs on)
	Typical power consumption	420 W (all LEDs on)
	Power factor	0.98 PF (230 V)
Programming and control	Protocol	USITT DMX512 A
	Setting and addressing	RDM
		Software upgradable with SGM USB uploader cable (P/N:83062011)
	DMX channels	1 or 2 DMX channels
Physical	Dimensions (L x H x W)	497 x 268 x 122 mm (19.6 x 10.6 x 4.8 in)
	Weight	8.9 kg (19.6 lbs.)
	Material	Aluminium
	Lens	PE and tempered glass front
	IP class	IP66
	Corrosion class	C5-M
	Color options	White – RAL 9010
		Black – RAL 9004
		Custom color – any RAL
Installation	Mounting points	2 x two quarter-turn locking points for one or two Omega brackets
	Orientation	Any
	Rigging possibilities	Floor stand (included) or hanging (Omega clamps included)
	Safety features	Bottom mount for safety wire
		Minimum distance to combustible materials: 0.3 m (11 in.)
		Minimum distance to illuminated surfaces: 0.3 m (11 in.)
Thermal	Temperature range, Operating	–40° to +50°C (-40° to +122°F)
	Temperature range, Start-up	–20° to +50°C (-4° to +122°F)
	Temperature range, Storage	–40° to +80°C (-40° to +176°F)
	Humidity (max.)	98%
	Cooling	Active, forced air, temperature-regulated, low noise
Connections	DMX data in/out	1 x 5 meter cable for DMX in and out
	Power	1 x 5 meter cable with bare ends
Certified to	CSA Std. C22.2 No. 166 ***	
Conforms to	UL Std. 1573 ***	
	2014/35/EU: Low Voltage Directive	EN 60598-1, EN 60598-2-17, EN 62471, EN 60529
	2014/30/EU: EMC Directive	EN 55103-1, EN 55103-2, EN 55015, EN 61547, EN 61000-3-2, EN 61000-3-3
	RoHS2 Directive	2011/65/EU
Included items	Included items	Floor stand (incl. screws)
		2 pcs. Omega brackets
		User manual
Fixtures and accessories	Fixtures	Order no: 80030710 - P-5 W Wash, 43deg, POI, BL
		Order no: 80030740 - P-5 W Wash, 43deg, POI, WH
		Order no: 80030780 - P-5 W Wash, 43deg, POI, CU
		Order no: 80030711 - P-5 W Wash, 21deg, POI, BL
		Order no: 80030741 - P-5 W Wash, 21deg, POI, WH
		Order no: 80030781 - P-5 W Wash, 21deg, POI, CU
		Order no: 80030712 - P-5 W Wash, 15deg, POI, BL
		Order no: 80030742 - P-5 W Wash, 15deg, POI, WH
		Order no: 80030782 - P-5 W Wash, 15deg, POI, CU
	Lens/s	Order no: 83061118 - P-5, Lens kit (43°)
		Order no: 83061117 - P-5, Lens kit (21°)
		Order no: 83061116 - P-5, Lens kit (15°)
	Cables	Order no: 83062011 - SGM USB uploader cable
	Brackets	Order no: 83060603 - BCC-2 Dual bracket
		Order no: 83060604 - BCC-4 Quad bracket
		Order no: 83060602 - Omega bracket
	Floorstand	Order no: 83060610 - Floorstand for i, P, Q and X series with 1/4-turn fasteners
	Barndoor	Order no: 83061119 - Accessory holder i-5/P-5 Series
		Order no: 83061120 - Barndoor 4-way, i-5/P-5/X-5/Q-7 Series
		Order no: 83061121 - Barndoor 8-way, i-5/P-5/X-5/Q-7 Series
		Order no: 83061122 - Color frame, i-5/P-5/X-5/Q-7 Series
	Flightcase	Order no: 82051501 - Flightcase for 4 pcs. of i-5/P-5/Q-7/X-5
		Order no: 82051502 - Flightcase for 4 pcs. of i-5/P-5/Q-7/X-5 incl. barndoors

**Figures provided by manufacturer and obtained under manufacturer's test conditions*

***Goniometer Scan / SGM Illumination Lab 1.6.0.0*

****Pending*

BL = Black (RAL 9004)

WH = White (RAL 9010)

CU = Custom Color (Any RAL color)

P•5 TW POI
Specifications

Optics	Light source	44 x high-power 10W white LEDs (2,200 - 5,300K)
	LEDs expected lifetime	50,000 hours*
	Interchangable lens option	15°, 21° & 43°
Photometric	Light output	22,300 lm** (43° lens)
	CRI	86
	Efficacy	53 lm/W
Features	Tilt	0 - 190°
	Dehumidifier	Base / head
	Power/DMX indicator	Base
Electrical	AC power	208 - 240V nominal 50/60Hz
	Maximum inrush current @ 240VAC	20A
	Maximum power consumption	450 W (all LEDs on)
	Typical power consumption	420 W (all LEDs on)
	Power factor	0.98 PF (230 V)
Programming and control	Protocol	USITT DMX512 A
	Setting and addressing	RDM
		Software upgradeable via Uploader cable (P/N:83062011)
	DMX channels	2, 4, 6 or 8
Physical	Dimensions (L x H x W)	497 x 268 x 122 mm (19.6 x 10.6 x 4.8 in)
	Weight	8.9 kg (19.6 lbs.)
	Material	Aluminium
	Lens	PE and tempered glass front
	IP class	IP66
	Corrosion class	C5-M
	Color options	White – RAL 9010
		Black – RAL 9004
		Custom color – any RAL
Installation	Mounting points	2 x two quarter-turn locking points for one or two Omega brackets
	Orientation	Any
	Rigging possibilities	Floor stand (included) or hanging (Omega clamps included)
	Safety features	Bottom mount for safety wire
		Minimum distance to combustible materials: 0.3 m (11 in.)
		Minimum distance to illuminated surfaces: 0.3 m (11 in.)
Thermal	Temperature range, Operating	−40° to +50°C (-40° to +122°F)
	Temperature range, Start-up	−20° to +50°C (-4° to +122°F)
	Temperature range, Storage	−40° to +80°C (-40° to +176°F)
	Humidity (max.)	98%
	Cooling	Active, forced air, temperature-regulated, low noise
Connections	DMX data in/out	1 x 5 meter cable for DMX in and out
	Power	1 x 5 meter cable with bare ends
Certified to	CSA Std. C22.2 No. 166 ***	
Conforms to	UL Std. 1573 ***	
	2014/35/EU: Low Voltage Directive	EN 60598-1, EN 60598-2-17, EN 62471, EN 60529
	2014/30/EU: EMC Directive	EN 55103-1, EN 55103-2, EN 55015, EN 61547, EN 61000-3-2, EN 61000-3-3
	RoHS2 Directive	2011/65/EU
Included items	Included items	Floor stand (incl. screws)
		2 pcs. Omega brackets
		User manual
Fixtures and accessories	Fixtures	Order no: 80030720 - P-5 TW Wash, 43deg, POI, BL
		Order no: 80030750 - P-5 TW Wash, 43deg, POI, WH
		Order no: 80030790 - P-5 TW Wash, 43deg, POI, CU
		Order no: 80030721 - P-5 TW Wash, 21deg, POI, BL
		Order no: 80030751 - P-5 TW Wash, 21deg, POI, WH
		Order no: 80030791 - P-5 TW Wash, 21deg, POI, CU
		Order no: 80030722 - P-5 TW Wash, 15deg, POI, BL
		Order no: 80030752 - P-5 TW Wash, 15deg, POI, WH
		Order no: 80030792 - P-5 TW Wash, 15deg, POI, CU
	Lens/s	Order no: 83061118 - P-5, Lens kit (43°)
		Order no: 83061117 - P-5, Lens kit (21°)
		Order no: 83061116 - P-5, Lens kit (15°)
	Cables	Order no: 83062011 - SGM USB uploader cable
	Brackets	Order no: 83060603 - BCC-2 Dual bracket
		Order no: 83060604 - BCC-4 Quad bracket
		Order no: 83060602 - Omega bracket
	Floorstand	Order no: 83060610 - Floorstand for i, P, Q and X series with 1/4-turn fasteners
	Barndoor	Order no: 83061119 - Accessory holder i-5/P-5 Series
		Order no: 83061120 - Barndoor 4-way, i-5/P-5/X-5/Q-7 Series
		Order no: 83061121 - Barndoor 8-way, i-5/P-5/X-5/Q-7 Series
		Order no: 83061122 - Color frame, i-5/P-5/X-5/Q-7 Series
	Flightcase	Order no: 82051501 - Flightcase for 4 pcs. of i-5/P-5/Q-7/X-5
		Order no: 82051502 - Flightcase for 4 pcs. of i-5/P-5/Q-7/X-5 incl. barndoors

**Figures provided by manufacturer and obtained under manufacturer's test conditions*

***Goniometer Scan / SGM Illumination Lab 1.6.0.0*

****Pending*

BL = Black (RAL 9004) / WH = White (RAL 9010) / CU = Custom Color (Any RAL color)

Q•2 POI
Specifications

Optics	Light source	864 x RGBW SMD LEDs (5,700K)
	LEDs expected lifetime	50,000 hours*
	Lens options	110° fixed
Photometric	Light output	8,800 lm**
	Efficacy	44 lm/W
Features	Tilt	0 - 190°
	LED panel	3 individually controllable segments
	Dehumidifier	Head
	Power/DMX indicator	Head
Electrical	AC power nominal	100 - 277V 50/60Hz
	AC power max rating	90 - 305V 50/60Hz
	Maximum inrush current @ 240VAC	75A
	Maximum power consumption	275 W (all LEDs on)
	Typical power consumption	200 W (all LEDs on)
	Power factor	0.98 PF (230 V)
Programming and Control	Protocol	USITT DMX512 A
	Setting and addressing	RDM
		Software upgradable with SGM USB uploader cable (P/N:83062011)
	DMX channels	3, 6, 9, 12, 15 or 22
Physical	Dimensions (L x H x W)	334 x 223 x 105 mm (13.2 x 8.8 x 4.1 in)
	Weight	6.0 kg (13.2 lbs.)
	Material	Aluminium
	Lens	Tempered glass front
	IP class	IP66
	Corrosion class	C5-M
	Color options	White – RAL 9010
		Black – RAL 9004
		Custom color – any RAL
Installation	Mounting points	Two quarter-turn locking points for one Omega bracket
	Orientation	Any
	Rigging possibilities	Floor stand (included) or hanging (Omega clamp included)
	Safety features	Bottom mount for safety wire
		Minimum distance to combustible materials: 0.3 m (11 in.)
		Minimum distance to illuminated surfaces: 0.3 m (11 in.)
Thermal	Temperature range, Operating	–40° to +50°C (-40° to +122°F)
	Temperature range, Start-up	–20° to +50°C (-4° to +122°F)
	Temperature range, Storage	–40° to +80°C (-40° to +176°F)
	Humidity (max.)	98%
	Cooling	Active, forced air, temperature-regulated, low noise
Connections	DMX data in/out	1 x 5 meter cable for DMX in and out
	Power	1 x 5 meter cable with bare ends
Certified to	CSA E60598-1:02, Ed: 2 ***	
	CSA-E598-2-17-98, Ed: 1 ***	
Conforms to	UL Std. 1573 ***	
	2014/35/EU: Low Voltage Directive	EN 60598-1, EN 60598-2-17, EN 62471, EN 60529
	2014/30/EU: EMC Directive	EN 55103-1, EN 55103-2, EN 55015, EN 61547, EN 61000-3-2, EN 61000-3-3
	RoHS2 Directive	2011/65/EU
Included items	Included Items	Floor stand (incl. screws)
		1 Omega bracket
		User manual
Fixtures and accessories	Fixtures	Order no: 80031000 - Q-2 Color Flood, POI, BL
		Order no: 80031050 - Q-2 Color Flood, POI, WH
		Order no: 80031080 - Q-2 Color Flood, POI, CU
	Cables	Order no: 83062011 - SGM USB uploader cable
	Bracket	Order no: 83060602 - Omega bracket
	Barndoor	Order no: 83061127 - Accessory holder i-2/P-2 series
		Order no: 83061129 - Barndoor 4-way, i-2/P-2/Q-2 series
		Order no: 83061130 - Barndoor 8-way, i-2/P-2/Q-2 series
		Order no: 83061131 - Color frame, i-2/P-2/Q-2 series
	Flightcase	Order no: 82051503 - Flightcase for 4 pcs. of i-2/P-2/Q-2 incl. barndoors

**Figures provided by manufacturer and obtained under manufacturer's test conditions*

***Goniometer Scan / SGM Illumination Lab 1.6.0.0*

****Pending*

BL = Black (RAL 9004) / WH = White (RAL 9010) / CU = Custom Color (Any RAL color)

Q•2 W POI
Specifications

Optics	Light source	432 x cool white LEDs (5,700K)
	LEDs expected lifetime	50,000 hours*
	Lens options	110° fixed
Photometric	Light output	22,800 lm**
	Efficacy	114 lm/W
	CRI	83
Features	Tilt	0 - 180°
	LED panel	12 individually controllable segments
	Dehumidifier	Head
	Power/DMX indicator	Head
Electrical	AC power nominal	100 - 277V 50/60Hz
	AC power max rating	90 - 305V 50/60Hz
	Maximum inrush current @ 240VAC	75A
	Maximum power consumption	275 W (all LEDs on)
	Typical power consumption	200 W (all LEDs on)
	Power factor	0.98 PF (230 V)
Programming and Control	Protocol	USITT DMX512 A
	Setting and addressing	RDM
		Software upgradable with SGM USB uploader cable (P/N:83062011)
	DMX channels	1, 3, 6, 12, 14 or 24
Physical	Dimensions (L x H x W)	334 x 223 x 105 mm (13,2 x 8,8 x 4.1 in)
	Weight	6,0 kg (13,2 lbs.)
	Material	Aluminium
	Lens	Tempered glass front
	IP class	IP66
	Corrosion class	C5-M
	Color options	White – RAL 9010
		Black – RAL 9004
		Custom color – any RAL
Installation	Mounting points	Two quarter-turn locking points for one Omega bracket
	Orientation	Any
	Rigging possibilities	Floor stand (included) or hanging (Omega clamp included)
	Safety features	Bottom mount for safety wire
		Minimum distance to combustible materials: 0.3 m (11 in.)
		Minimum distance to illuminated surfaces: 0.3 m (11 in.)
Thermal	Temperature range, Operating	–40° to +50°C (-40° to +122°F)
	Temperature range, Start-up	–20° to +50°C (-4° to +122°F)
	Temperature range, Storage	–40° to +80°C (-40° to +176°F)
	Humidity (max.)	98%
	Cooling	Active, forced air, temperature-regulated, low noise
Connections	DMX data in/out	1 x 5 meter cable for DMX in and out
	Power	1 x 5 meter cable with bare ends
Certified to	CSA E60598-1:02, Ed: 2 ***	
	CSA-E598-2-17-98, Ed: 1 ***	
Conforms to	UL Std. 1573 ***	
	2014/35/EU: Low Voltage Directive	EN 60598-1, EN 60598-2-17, EN 62471, EN 60529
	2014/30/EU: EMC Directive	EN 55103-1, EN 55103-2, EN 55015, EN 61547, EN 61000-3-2, EN 61000-3-3
	RoHS2 Directive	2011/65/EU
Included items	Included items	Floor stand (incl. screws)
		1 Omega bracket
		User manual
Fixtures and accessories	Fixtures	Order no: 80031010 - Q-2 W Color Flood, POI, BL
		Order no: 80031060 - Q-2 W Color Flood, POI, WH
		Order no: 80031090 - Q-2 W Color Flood, POI, CU
	Cables	Order no: 83062011 - SGM USB uploader cable
	Bracket	Order no: 83060602 - Omega bracket
	Barndoor	Order no: 83061127 - Accessory holder i-2/P-2 series
		Order no: 83061129 - Barndoor 4-way, i-2/P-2/Q-2 series
		Order no: 83061130 - Barndoor 8-way, i-2/P-2/Q-2 series
		Order no: 83061131 - Color frame, i-2/P-2/Q-2 series
	Flightcase	Order no: 82051503 - Flightcase for 4 pcs. of i-2/P-2/Q-2 incl. barndoors

**Figures provided by manufacturer and obtained under manufacturer's test conditions*

***Goniometer Scan / SGM Illumination Lab 1.6.0.0*

****Pending*

BL = Black (RAL 9004) / WH = White (RAL 9010) / CU = Custom Color (Any RAL color)

Q•7 POI
Specifications

Optics	Light source	2,000 x RGBW SMD LEDs (5,700K)
	LEDs expected lifetime	50,000 hours*
	Lens	110° fixed
Photometric	Light output	22,500 lm (all LEDs on)**
		2,600 lm (red)**
		5,000 lm (green)**
		1,200 lm (blue)**
		12,000 lm (white)**
	Efficacy	50 lm/W
Features	Tilt	0 - 190°
	Dehumidifier	Base / head
	Power/DMX indicator	Base
Electrical	AC Power	208 - 240 V nominal 50/60 Hz
	Maximum inrush current @ 240VAC	20A
	Maximum power consumption	465 W (all LEDs on)
	Typical power consumption	450 W (all LEDs on)
	Power factor	0.99 PF (230 V)
Programming and control	Protocol	USITT DMX 512 A
	Setting and addressing	RDM
		Software upgradable with SGM USB uploader cable (P/N:83062011)
	DMX channels	3, 4, 6 or 8
Physical	Dimensions (L x H x W)	497 x 268 x 122 mm (19.6 x 10.6 x 4.8 in)
	Weight	8.1 kg (17.9 lbs.)
	Material	Aluminium
	Lens	Tempered glass front
	IP class	IP66
	Corrosion class	C5-M
	Color options	White – RAL 9010
		Black – RAL 9004
		Custom color – any RAL
Installation	Mounting points	2 x two quarter-turn locking points for one or two Omega brackets
	Orientation	Any
	Rigging possibilities	Floor stand (included) or hanging (Omega clamps included)
	Safety features	Bottom mount for safety wire
		Minimum distance to combustible materials: 0.3 m (11 in.)
		Minimum distance to illuminated surfaces: 0.3 m (11 in.)
Thermal	Temperature range, Operating	–40° to +50°C (-40° to +122°F)
	Temperature range, Start-up	–20° to +50°C (-4° to +122°F)
	Temperature range, Storage	–40° to +80°C (-40° to +176°F)
	Humidity (max.)	98%
	Cooling	Active, forced air, temperature-regulated, low noise
Connections	DMX data in/out	1 x 5 meter cable for DMX in and out
	Power	1 x 5 meter cable with bare ends
Conforms to	UL Std. 1573***	
	2014/35/EU: Low Voltage Directive	EN 60598-1, EN 60598-2-17, EN 62471, EN 60529
	2014/30/EU: EMC Directive	EN 55103-1, EN 55103-2, EN 55015, EN 61547, EN 61000-3-2, EN 61000-3-3
	RoHS2 Directive	2011/65/EU
Included items	Included items	Floor stand (incl. screws)
		2 pcs. Omega brackets
		User manual
Fixtures and accessories	Fixtures	Order no: 80030800 - Q-7 Color Flood, POI, BL
		Order no: 80030850 - Q-7 Color Flood, POI, WH
		Order no: 80030880 - Q-7 Color Flood, POI, CU
	Cables	Order no: 83062011 - SGM USB uploader cable
	Brackets	Order no: 83060603 - BCC-2 Dual bracket
		Order no: 83060604 - BCC-4 Quad bracket
		Order no: 83060602 - Omega bracket
	Floorstand	Order no: 83060610 - Floorstand for i/P/Q /X Series with 1/4-turn fasteners
	Barndoor	Order no: 83061119 - Accessory holder i-5/P-5 Series
		Order no: 83061120 - Barndoor 4-way, i-5/P-5/X-5/Q-7 Series
		Order no: 83061121 - Barndoor 8-way, i-5/P-5/X-5/Q-7 Series
		Order no: 83061122 - Color frame, i-5/P-5/X-5/Q-7 Series
	Flightcase	Order no: 82051501 - Flightcase for 4 pcs. of i-5/P-5/Q-7/X-5 Series
		Order no: 82051502 - Flightcase for 4 pcs. of i-5/P-5/Q-7/X-5 incl. barndoors

**Figures provided by manufacturer and obtained under manufacturer's test conditions*

***Goniometer Scan / SGM Illumination Lab 1.6.0.0*

****Pending*

BL = Black (RAL 9004) / WH = White (RAL 9010) / CU = Custom Color (Any RAL color)

Q•7 W POI
Specifications

Optics	Light source	1,000 x cool white LEDs (5,700K)
	LEDs expected lifetime	50,000 hours*
	Lens	110° fixed
Photometric	Light output	47,800 lm**
	Efficacy	105 lm/W
	CRI	Min. 75
Features	Tilt	0 - 190°
	LED panel	4 individually controllable panels
	Dehumidifier	Base / Head
	Power/DMX indicator	Base
Electrical	AC power	208 - 240 V nominal 50/60 Hz
	Maximum inrush current @ 240VAC	20A
	Maximum power consumption	485 W (all LEDs on)
	Typical power consumption	455 W (all LEDs on)
	Power factor	0.99 PF (230 V)
Programming and control	Protocol	USITT DMX 512 A
	Setting and addressing	RDM
		Software upgradable with SGM USB uploader cable (P/N:83062011)
	DMX channels	1, 4, 6 or 8
Physical	Dimensions (L x H x W)	497 x 268 x 122 mm (19.6 x 10.6 x 4.8 in)
	Weight	8.1 kg (17.9 lbs.)
	Material	Aluminium
	Lens	Tempered glass front
	IP class	IP66
	Corrosion class	C5-M
	Color options	White – RAL 9010
		Black – RAL 9004
		Custom color – any RAL
Installation	Mounting points	Two times two quarter-turn locking points for one or two Omega brackets
	Orientation	Any
	Rigging possibilities	Floor stand (included) or hanging (Omega clamps included)
	Safety features	Bottom mount for safety wire
		Minimum distance to combustible materials: 0.3 m (11 in.)
		Minimum distance to illuminated surfaces: 0.3 m (11 in.)
Thermal	Temperature range, Operating	–40° to +50°C (-40° to +122°F)
	Temperature range, Start-up	–20° to +50°C (-4° to +122°F)
	Temperature range, Storage	–40° to +80°C (-40° to +176°F)
	Humidity (max.)	98%
	Cooling	Active, forced air, temperature-regulated, low noise
Connections	DMX data in/out	1 x 5 meter cable for DMX in and out
	Power	1 x 5 meter cable with bare ends
Conforms to	UL Std. 1573 ***	
	2014/35/EU: Low Voltage Directive	EN 60598-1, EN 60598-2-17, EN 62471, EN 60529
	2014/30/EU: EMC Directive	EN 55103-1, EN 55103-2, EN 55015, EN 61547, EN 61000-3-2, EN 61000-3-3
	RoHS2 Directive	2011/65/EU
Included items	Included items	Floor stand (incl. screws)
		2 pcs Omega brackets
		User manual
Fixtures and accessories	Fixtures	Order no: 80030810 - Q-7 W Color Flood, POI, BL
		Order no: 80030860 - Q-7 W Color Flood, POI, WH
		Order no: 80030890 - Q-7 W Color Flood, POI, CU
	Cables	Order no: 83062011 - SGM USB uploader cable
	Brackets	Order no: 83060603 - BCC-2 Dual bracket
		Order no: 83060604 - BCC-4 Quad bracket
		Order no: 83060602 - Omega bracket
	Floorstand	Order no: 83060610 - Floorstand for i, P, Q and X series with 1/4-turn fasteners
	Barndoor	Order no: 83061119 - Accessory holder i-5 & P-5 Series
		Order no: 83061120 - Barndoor 4-way, i-5, P-5, X-5 & Q-7 Series
		Order no: 83061121 - Barndoor 8-way, i-5, P-5, X-5 & Q-7 Series
		Order no: 83061122 - Color frame, i-5, P-5, X-5 & Q-7 Series
	Flightcase	Order no: 82051501 - Flightcase for 4 pcs. of i-5/P-5/Q-7/X-5
		Order no: 82051502 - Flightcase for 4 pcs. of i-5/P-5/Q-7/X-5 incl. barndoors

**Figures provided by manufacturer and obtained under manufacturer's test conditions*

***Goniometer Scan / SGM Illumination Lab 1.6.0.0*

****Pending*

BL = Black (RAL 9004) / WH = White (RAL 9010) / CU = Custom Color (Any RAL color)

POI
IP66

DMX & Art-Net

TLD-612 A Touring
LED Driver - Art-Net

The TLD-612A offers all the same features and driving capabilities as the regular TLD-612, with the variation of offering an Ethernet RJ45 Art-Net interface instead of regular 5-pin XLR DMX interface.

The output of the TLD-612A is completely individually configurable by software, which makes it possible to send any channel range in any universe to each output. The Art-Net interface is especially designed for high-speed / high-flow DMX, thereby making it a perfect tool for pixel mapping.

This makes the TLD-612A suitable for applications that require numerous DMX universes. This driver ensures quick and easy installation for touring.

Physical	Dimensions (L x W x H)	715 x 80 x 182 mm
	Weight	4 kg
Installation	Orientation	Any
	IP class	IP65
Electrical	Power supply voltage	100-240 V (50 / 60 Hz)
	Maximum power consumption	360 W (max)
Connections/signal source	Signal source	Artistic License Art-Net 3
	Art-Net data input	RJ45 Connectors
	Driver data output	Locking 4-pin
		RJ765 sockets

ILD
Installation LED Driver

The ILD, Installation LED Driver, shares the majority of the features of the TLD-612A, but has a smaller and more compact power supply, which makes it suitable for permanent installations, where a small physical footprint is required.

The ILD is capable of driving either 6 pcs. of LT-100 tubes, 3 pcs. of LT-200 tubes or 3 pcs. of full-length LB-100 strings (7 pcs. of LB-100 pr. string). The ILD is also IP65-rated and has daisy-chainable Ethernet for Art-Net input, and it has a max power consumption 120 W.

Physical	Dimensions (L x W x H)	258 x 65 x 116 mm
	Weight	2.1 kg
Installation	Orientation	Any
	IP class	IP65
Electrical	Power supply voltage	100-240 V (50 / 60 Hz)
	Maximum power consumption	120 W (max)
Connections/signal source	Signal source	Artistic license Art-Net 3
	Art-Net data input	RJ45 connectors
	Driver data output	Locking 4-pin
		RJ765 sockets

A-4
Art-Net to DMX converter

The A-4 is a multi-purpose Art-Net DMX recorder/player combined with monitoring features.

With the A-4, SGM fixtures become remotely accessible via RDM, allowing you to program your show, upload and schedule it from a remote location when connected to the Internet. The A-4 also works as a remote monitoring device to notify the technicians of any irregularities within the fixtures.

The housing of the A-4 is extremely compact and rugged and is designed for touring as well as installations.

- Art-Net and sACN protocols
- Data merger and DMX splitter (input / output)
- 4 fully configurable DMX ports
- Internal SD-card (optional)
- Recorder and playback when SD card is fitted
- Scheduler for playback
- RDM control of fixtures
- Fixture surveillance and error logging
- Online fixture view via RDM and the Internet

Physical	Dimensions (L x W x H)	95 x 65 x 115mm
	Weight	0,7 kg
Installation	Orientation	Any
	IP class	IP20
Electrical	Power supply voltage	100-240 V (50 / 60 Hz)
	Maximum power consumption	10 W (max)
Connections/signal source	Signal source	Artistic License Art-Net 3
	Art-Net data input	RJ45 Connectors
	DMX outputs	5-pin neutrik locking-DMX

SGM Light A/S
Sommervej 23
8210 Aarhus V
Tel: +45 70 20 74 00
info@sgmlight.com
www.sgmlight.com